Orientalmotor

αSTEP

AZ Series

Battery-Free Absolute Mechanical Sensor Equipped Motor

αSTEP

Absolute + Battery-free = Advanced Positioning

αSTEP
AZ Series
Built-in Battery-Free Absolute Sensor

The **AZ** Series has a built-in absolute sensor (patented), which provides a battery-free absolute system. The drive system uses a αSTEP. This provides both ease of use and reliability.

● Equipped with absolute sensor. Provides battery-free absolute system

- Built-in battery-free mechanical absolute sensor
- The absolute system makes external sensors unnecessary and reduces wiring
- No battery management and reduced maintenance

● αSTEP. Compact, high response, high reliability, high efficiency motors

- αSTEP provides high performance, high reliability and saves space
- Simplified programming with simple sequence function
- Monitoring of test operation, motor operating status (alarms, status) is possible

What is the αSTEP?

αSTEP are stepper motor-based motors which provide unique control that are a hybrid of the advantages of both open loop control and closed loop control. The motor's position is always monitored, and it can automatically switch between the two control types depending on conditions. It normally operates in open loop control, and activates synchronously with commands, providing high responsivity. Under an overload condition, the motor position is corrected and it operates in the closed loop control mode. These motors combine ease of use with reliability.

AZ Series Product Line

A product line to support a wide variety of equipment, controllers and systems.

Motor

Standard Type

Frame Size 20 mm~85 mm

TS Geared Type

<Spur Gear Mechanism>

Low Backlash

High Speed Operation

Frame Size 42 mm~90 mm

Right-Angle **FC** Geared Type

<Face Gear Mechanism>

Low Backlash

Space Saving

Frame Size 42 mm, 60 mm

PS Geared Type

<Planetary Gear Mechanism>

Low Backlash

High Torque

Frame Size 28 mm~90 mm

HPG Geared Type

<Harmonic Planetary®>

Non-Backlash

High Torque, High Accuracy

Shaft Output

Flange Output

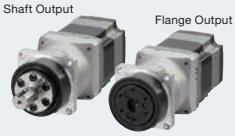

Frame Size 40 mm~90 mm

Harmonic Geared Type

<Harmonic Drive®>

Non-Backlash

High Torque, High Accuracy

Frame Size 30 mm~90 mm

Driver

Network Compatible Driver

FA Network Control

The driver can be controlled directly from the host control device via the FA network.

EtherCAT EtherNet/IP PROFINET MECHATROLINK SSCNETIII/H

AC Input DC Input

Built-in Controller Type FLEX

I/O Control/ Modbus Control

Positioning data is set to the driver (256 points). Capable of FA network control when a network converter (sold separately) is used.

Modbus (RTU)

FLEX is the collective name for products that support I/O control, Modbus (RTU) control and FA network control via network converters.

AC Input DC Input

Pulse Input Type with RS-485 Communication

Pulse Signal Control

Motor position, speed, torque, alarms and temperature can be monitored using RS-485 communication.

Pulse Input Type

The motor is controlled from the positioning module (pulse generator).

AC Input DC Input

mini Driver

FA Network Control/ Modbus Control

A network compatible driver that is smaller and lighter than box-type drivers. Also compatible with battery power supplies.

Details about this product are in the separate mini driver catalog.

EtherCAT EtherNet/IP PROFINET Modbus (RTU)

DC Input

Network Compatible Multi-Axis Driver

FA Network Control

This is a multi-axis driver that is compatible with SSCNETIII/H, MECHATROLINK-III and EtherCAT driver profiles.
It can connect to 2, 3 or 4 axes.

Details about this product are in the separate multi-axis driver catalog.

EtherCAT MECHATROLINK SSCNETIII/H

DC Input

Linear and Rotary Actuators Equipped with **AZ** Series

Because the same motors and drivers are used, wiring, control and maintenance parts have been standardized, startup time is reduced and operation is simplified.

Electric Linear Slides
EZS Series
EAS Series
EZSH Series

Electric Linear Cylinders
EAC Series

Hollow Rotary Actuators
DGII Series

Compact Electric Linear Cylinders
DR Series
DRS2 Series

Electric Gripper
EH Series

Rack-and-Pinion System
L Series

- EtherCAT is a patented technology licensed from Beckhoff Automation GmbH (Germany) and is a registered trademark of that company.
- EtherNet/IP is a registered trademark of ODVA, MECHATROLINK is a registered trademark of MECHATROLINK Members Association, CC-Link is a registered trademark of CC-Link Partner Association, and Modbus (RTU) is a registered trademark of Schneider Automation Inc.
- PROFINET is a registered trademark or trademark of PROFIBUS Nutzerorganisation e.V.(PNO) and SSCNETIII/H is a registered trademark or trademark of Mitsubishi Electric Corporation.
- Harmonic Planetary, Harmonic Drive and HD are registered trademarks of Harmonic Drive Systems Inc.

Equipped with a Newly Developed Absolute Mechanical Sensor, Advanced Technology is Available at an Affordable

Newly Developed Absolute Mechanical Sensor

A newly developed compact, low cost, battery-free absolute mechanical sensor (patented) is developed which contributes to productivity improvements and cost reductions.

●Mechanical Sensor

Analog clocks measure the current time based on the positions of the second hand, minute hand and hour hand. The newly developed sensor is a mechanical sensor equipped with multiple gears equivalent to the hands on a clock. Because it detects positioning information by detecting the angles of the respective gears, a battery is not required.

●Multiple - Rotation Absolute System

Absolute position detection is possible with ±900 rotations (1800 rotations)* of the motor shaft from the home position.

*The frame sizes 20 mm and 28 mm are ±450 rotations (900 rotations).

・Basic principles are like an analog clock

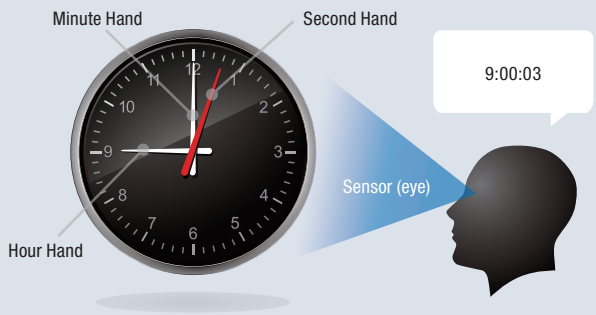

●Home Setting Method

By pressing the switch on the driver surface, home position can be set simply, and the home position can be saved with the sensor. Furthermore, it is possible to set the home position using the support software (**MEXE02**) or the external input signal.

・Home Position Setting

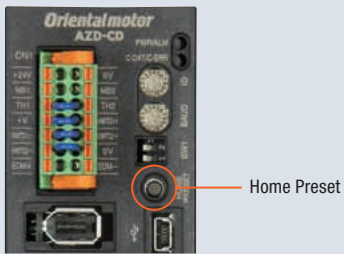

Eliminate Extra Sensors with a Battery-Free Absolute System

No External Sensors Required

External sensors such as the home sensor or limit sensor are not required with an absolute system.

●High-Speed Return-to-Home + Improved Return-to-Home Accuracy

High speed return-to-home is possible without the use of a home sensor.
Reducing return-to-home time helps to shorten the machine cycle.
Home position accuracy is increased because variations in sensor sensitivity are eliminated.

Previous Home Detection for Control Motor

The home position is detected by detecting the limit sensor (±LS) and home sensor (HOME).

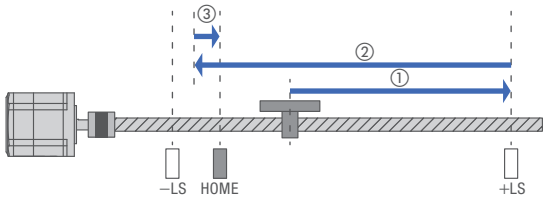

Return-to-Home Operation of AZ Series

There is no need to detect the limit sensor, and it can travel directly at high speed to the home position recorded by the absolute sensor.

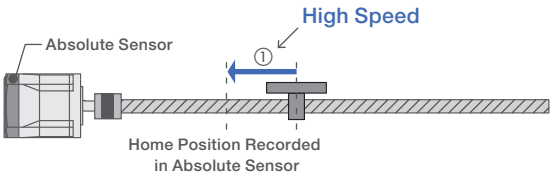

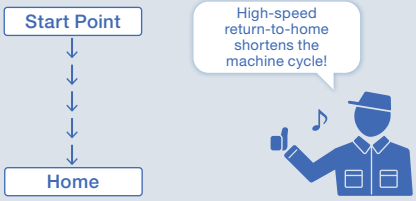

●Decrease Costs

Sensor costs and wiring costs can be reduced.

●Reduced Wiring

Sensor cables are no longer necessary, so the degree of freedom for equipment design is increased.

●External Sensor Malfunctions Have No Impact

There is no concern about sensor malfunctions (when operating in environments filled with oil mist or filled with metal pieces due to metal processing), sensor failures or wire disconnections.

●Software limits on the driver can be used to prevent operation beyond the limits.

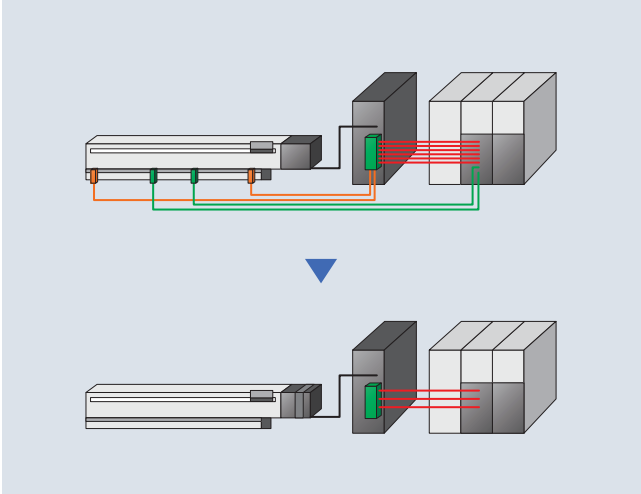

Battery-Free Absolute System

Battery-Free

No battery is necessary for a mechanical-type sensor.
Positioning information is managed mechanically by the absolute sensor.

●Operation Resumes Immediately from the Stopped Position Even After an Emergency Stop

Even if the power shuts down during a positioning operation or the cable between the motor and the driver is disconnected, the positioning information is retained. With the built-in controller type, you can restart the positioning operation, without performing return-to-home after an emergency stop on the production line or a blackout.

●Because the positioning information is stored in the Absolute sensor, the home position must be reset if the motor is replaced.

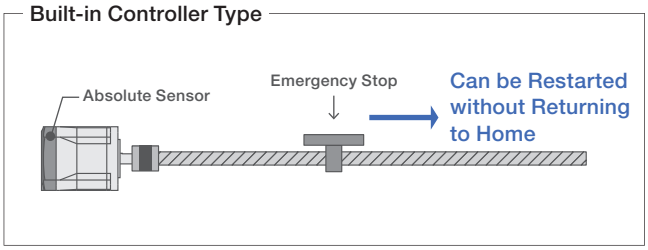

●No Battery to Replace

Reduces maintenance time and costs.

●Unlimited Driver Installation Possibilities

Because there is no need to secure space for battery replacement, there are no restrictions on the installation location of the driver, improving the flexibility and freedom of the layout design of the control cabinet.

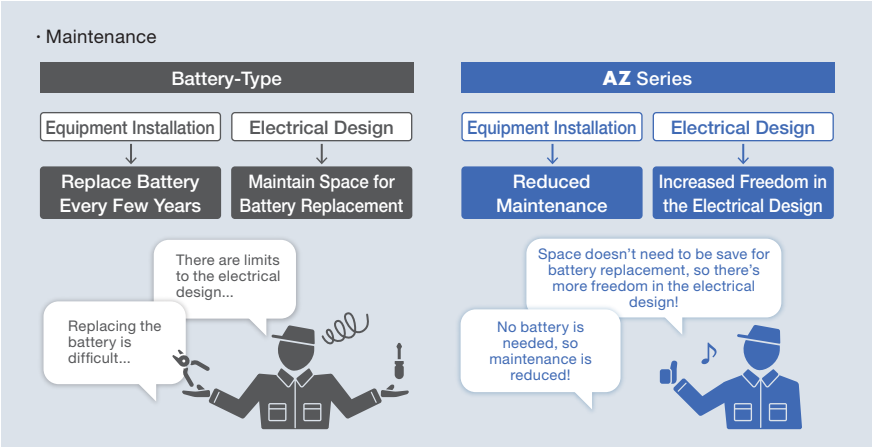

●Safe for Overseas Shipping

Normal batteries will self-discharge, so care must be taken when the equipment requires a long shipping time, such as when being sent overseas. The absolute sensor does not require a battery, so there is no limit as to how long the positioning information is maintained. In addition, there is no need to worry about various safety regulations, which must be taken into consideration when shipping a battery overseas.

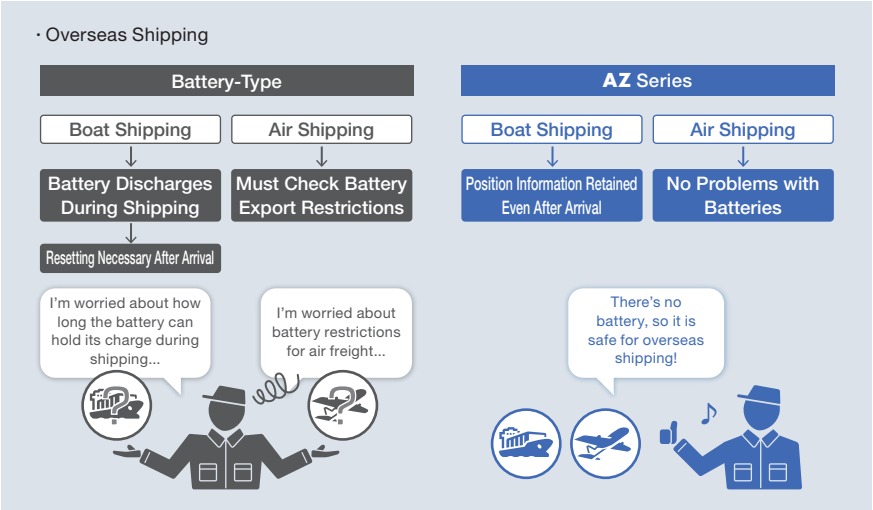

Features of αSTEP

Hybrid Control Allows for Control that is Both Easier to Use and More Accurate

αSTEP is a stepper motor-based series of motors with a unique hybrid control system that combines the advantages of both open loop and closed loop control.
The motor position is constantly monitored and control is switched to one of the two types depending on the situation.

●The Control is Normally Open Loop, and Provides Ease of Use Similar to a Stepper Motor

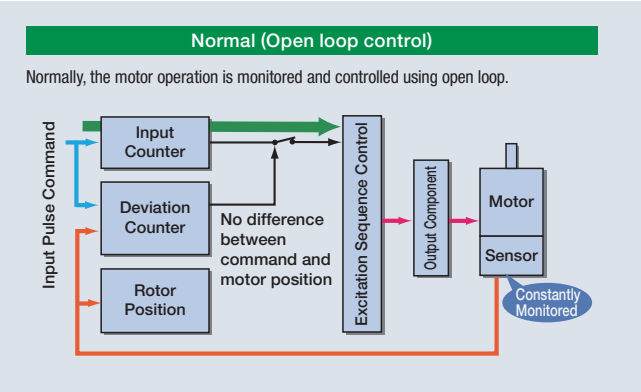

●Control Switches to Closed Loop During a Overload, Allowing for More Reliable Operation

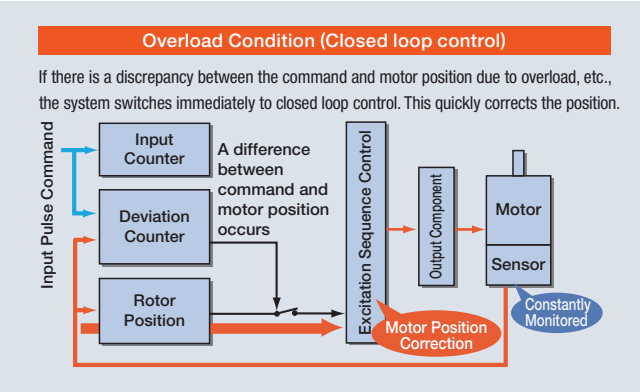

High Response

By utilizing the high responsiveness of the stepper motor, moving a short distance for a short time is possible. The motors can execute commands without lagging.

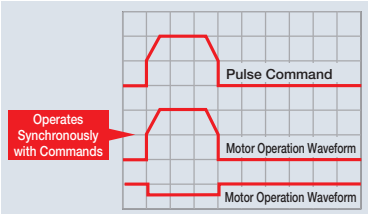

Holding the Stop Position without Hunting

During positioning, the motor stops with its own holding force without hunting. Because of this, it is ideal for applications where the low rigidity of the mechanism requires absence of vibration upon stopping.

Tuning-Free

Because it is normally operated with open loop control, positioning is still possible without gain adjustment even when the load fluctuates etc. due to the use of a belt mechanism, cam or chain drive, etc.

Continues Operation Even with Sudden Load Fluctuation and Sudden Acceleration

It operates synchronously with commands using open loop control during normal conditions. In an overload condition, it switches immediately to closed loop control to correct the position.

Alarm Signal Output in Case of Abnormality

If an overload is applied continuously, an alarm signal is output. When the positioning is complete, an END signal is output. This ensures the same level of reliability as a servo motor.

●Smooth Operation Even at Low Speed

Thanks to the standard microstep drive and smooth drive function*, vibration is reduced even at low speed and the motor can move objects smoothly.

*The smooth drive function automatically microsteps based on the same traveling amount and speed used in the full step mode, without changing the pulse input settings.

Power Saving, Low Heat Generation

High-efficiency motors reduce heat generation and save energy.

●Significantly Reduced Heat Generation

・Temperature Distribution by Thermography

Comparison under the same conditions.

・Motor Surface Temperature during Operation Under the Same Operating Conditions

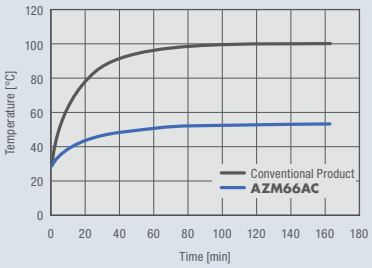

●Power Consumption and CO_2 Emissions 47% Less than Conventional Products

(Compared to other Oriental Motors products)

・CO_2 Emissions

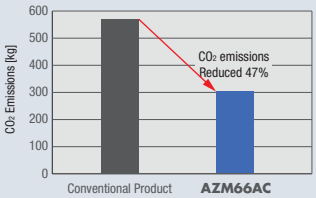

※ Operating Conditions
・Speed: 1000 r/min
・Load Factor: 50%
・Operating Time: 24 hours of operation, 365 days
・Operation Conditions: 70% operating, 25% stand-by, 5% off
・Power Supply Voltage: Single-Phase 200-240 VAC
・CO_2 Coefficient: 0.519 kg-CO_2/kWh

Driver Types

AC : Single-Phase 100-120 VAC, Single-Phase/Three-Phase 200-240 VAC Input
DC : 24/48 VDC Input

Interface	Driver Type (Driver type names)		
	 Single-Axis Driver	 mini Driver	 Multi-Axis Driver
EtherCAT	AC DC EtherCAT Drive Profile Compatible *1	DC EtherCAT Drive Profile Compatible *1	DC EtherCAT Drive Profile Compatible *1
EtherNet/IP	AC DC EtherNet/IP Compatible	DC EtherNet/IP Compatible	—
PROFINET	AC DC PROFINET Compatible	DC PROFINET Compatible	—
MECHATROLINK	AC MECHATROLINK-Ⅲ Compatible	DC RS-485 Communication Type *2	DC MECHATROLINK-Ⅲ Compatible
SSCNETⅢ/H SERVO SYSTEM CONTROLLER NETWORK	AC SSCNETⅢ/H Compatible	—	DC SSCNETⅢ/H Compatible
CC-Link	AC DC Built-in Controller Type *2	DC RS-485 Communication Type *2	—
Modbus (RTU)	AC DC Built-in Controller Type	DC RS-485 Communication Type	—
Pulse	AC DC Pulse Input Type Pulse Input Type with RS-485 Communication	—	—
I/O	AC DC Built-in Controller Type	—	—

*1 EtherCAT drive profile compatible drivers have passed the official EtherCAT conformance test.
*2 Control using CC-Link and MECHATROLINK is possible when used with an optional network converter (gateway).

Single-Axis Driver

A wide variety of interface types and power supply input types are available.
AC input drivers can create high torque, which contributes to a reduction in positioning time.
Compact DC input drivers contribute to saving installation space and making equipment smaller and lighter.
Consider the purpose and application when selecting.

Network Compatible Driver

These are compatible with the major industrial networks used around the globe.
This helps with centralized management of equipment information and reduced wiring.
Compatible interfaces: EtherCAT, EtherNet/IP, PROFINET, MECHATROLINK-Ⅲ, SSCNETⅢ/H, Modbus (RTU)

Built-in Controller Type CFLEX

- The operating data, such as position or speed, is set in the driver, and is then selected and executed from the I/O unit. A maximum of 256 points of operating data can be registered.
- Control can be performed using I/O, Modbus (RTU) or a network converter (gateway). When used with a network converter, control via CC-Link is possible.

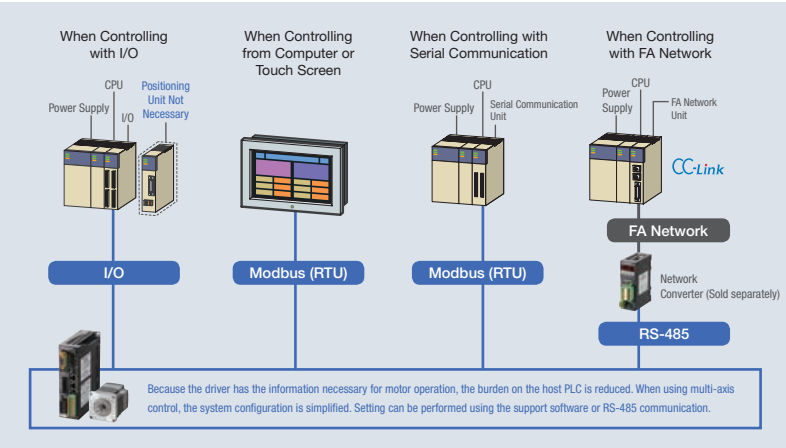

Pulse Input Type with RS-485 Communication

Operation is executed according to the pulse signal input to the driver.
Motor status information (position, speed, torque, alarms and temperature) can be monitored using RS-485 communication.

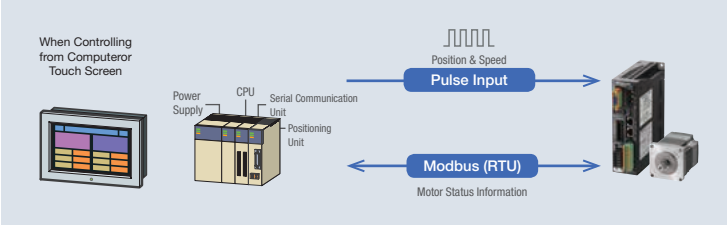

Pulse Input Type

Operation is executed according to the pulse signal input to the driver. Alarm history can be checked and various conditions can be monitored with the support software **MEXE02**.

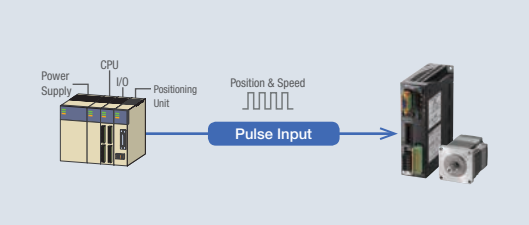

mini Driver

Modular Automation Compatible Products

Compact and lightweight design was pursued. Can be installed in narrow spaces.
The broad voltage specifications that can be used with a battery power supply make this suitable for integration into self-powered equipment.

"Modular Automation Compatible Products" are a group of products based on the shared concept of battery operation, compact size and lightweight. Ideal for installation in self-propelled equipment and mobile facilities, they contribute to the creation of flexible automation lines and modular automation, which will see increasing demand in the future.

●Please refer to the appropriate separate catalog for details about the products.

Multi-Axis Driver

Multiple axes (max. 4 axes) can be controlled with a single driver.
The host control device and power supply connections have been consolidated into a single driver, which contributes to space and reduced wiring.

Easy Setup and Convenient Functions of the **AZ** Series.

Support Software **MEXE02**

The support software **MEXE02** can be downloaded from the Oriental Motor website.

Easy Setting and Easy Operation

The support software **MEXE02** can be used for basic settings such as editing operation data and setting parameters.
In addition, the sequence function allows for advanced motions using simple inputs.

● Unit Setting Wizard

This is a function that allows the traveling amount, speed, etc. to be displayed and input in the designated units. Display and settings can be made in the units (mm, deg) that match the mechanism that is being used, eliminating the need for unit conversion and simplifying the input of operating data.

● Creation of Recovery Data Files

A file that contains the product's settings at time of shipping is created initially for use when the product is replaced for maintenance or during a breakdown.
Make sure that a recovery file is created when using linear & rotary actuators.

● Simplified Main Program Thanks to the Sequence Function

For the **AZ** Series, stored data operation includes a wide variety of sequence functions such as linked operation, timer settings between operations, conditional branching and loop counts.
Sequence programming of the host system can be simplified.

Built-in Controller Type

- Number of Positioning Operation Data Sets (Up to 256)
- General-Purpose I/O Signal Counts (Input 10, output 6)
- Communication I/O Signal Counts (Input 16, output 16)

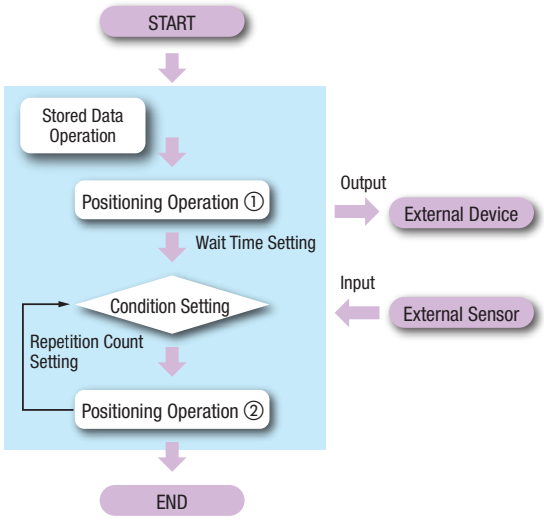

Test Function

This function enables stand-alone operation of a motor or checking the connection to the host system.

Using this function at equipment startup can lead to shotening the time needed.

● Teaching and Remote Operation On startup

Data setting software can be used to easily perform the home setting and also drive the motor. Teaching and test operation can be performed before connecting to the host system, which contributes to reduce startup time of the equipment.

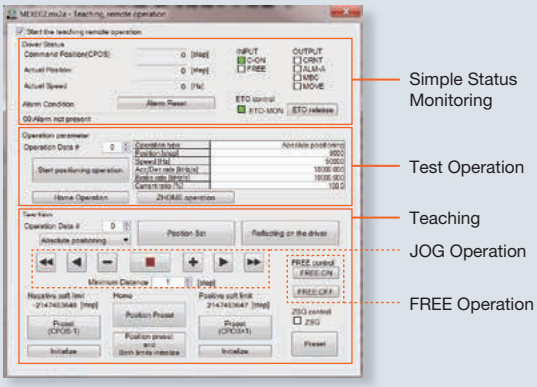

● I/O Tests On startup For operation

Input monitors can be monitored and output signals can be deliberately output. This function is useful when checking the wiring to the host system and for remote I/O operation.

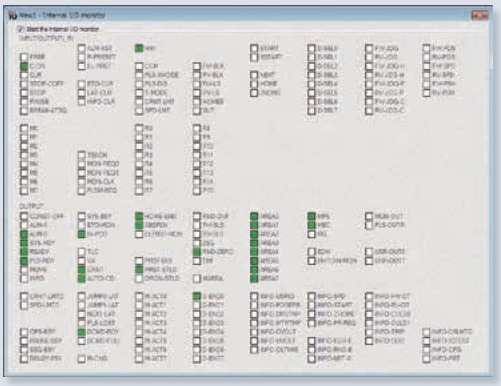

Various Monitoring Functions

● Waveform Monitoring On startup

The operating status of the motor and output signals used to can be monitored using an oscilloscope-like image. This can be used for equipment start-up and adjustment.

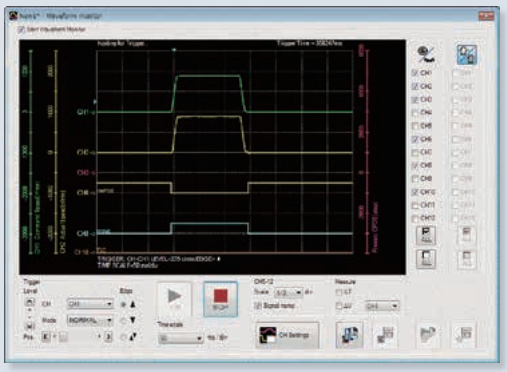

● Alarm Monitoring On startup

When an abnormality occurs, the details of the abnormality, the operating status at the time of the occurrence, and the solution can be checked.

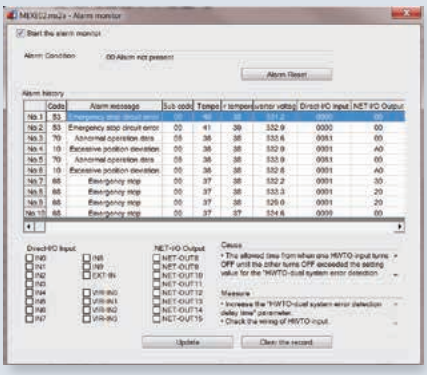

● Status Monitor On startup

In addition to being able to monitor the speed, motor, driver temperature, and load factor during operations, the integrating rotation amount, etc. can be monitored from the start of use. The signal for each item can be output at your discretion, which leads to effective maintenance.

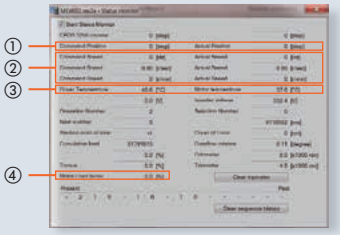

① Detects the actual position with respect to the command position.

② Detects the actual speed with respect to the command speed.

③ Detects the temperature of the motor encoder and driver.

④ Displays the current load factor with the output torque at the rotation speed at 100%.

● Multi-Monitoring Compatible

Multiple setting screens such as data setting, test operation and monitoring can be opened and used simultaneously on separate screens. This makes equipment startup and adjustment easier to carry out.

Product Line of **AZ** Series

Motor

AC : Single-Phase 100-120 VAC, Single-Phase/Three-Phase 200-240 VAC Input
DC : 24/48 VDC Input

Type		Electromagnetic Brake	Frame Size				
			20 mm	28 mm*6	42 mm*2	60 mm	85 mm 90 mm*4
	Standard Motor Shaft Type Round with a Flat/Straight/Keyed Motor Cable Shape Horizontal Cable Outlet 	Not equipped	DC *1	DC *1	AC DC	AC DC	AC
		Equipped	—	—	AC *3 DC *3	AC DC	AC *5
Low Backlash	**TS** Geared (Spur gear mechanism) Cable Outlet Direction Can be Selected Bottom/Top/Right/Left Low Gear Ratio, High Speed Operation Gear Ratio: 3.6, 7.2, 10, 20, 30 	Not equipped	—	—	AC DC	AC DC	AC
		Equipped	—	—	AC DC	AC DC	AC
Low Backlash	Right-Angle **FC** Geared (Face gear mechanism) Right-Angle Gear for Positioning Gear Ratio: 7.2, 10, 20, 30 	Not equipped	—	—	AC DC	AC DC	—
		Equipped	—	—	AC DC	AC DC	—
Low Backlash	**PS** Geared (Planetary gear mechanism) Gear Ratios for Selecting the Desired Step Angle Gear Ratio: 5, 7.2, 10, 25, 36, 50 	Not equipped	—	DC *1	AC DC	AC DC	AC
		Equipped	—	—	AC DC	AC DC	AC
Non-Backlash	**HPG** Geared (Harmonic Planetary®) High Positioning Accuracy Gear Ratio: 5, 9, 15 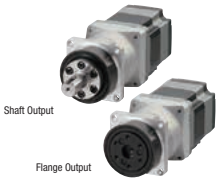	Not equipped	—	—	AC DC	AC DC	AC
		Equipped	—	—	AC DC	AC DC	AC
Non-Backlash	Harmonic Geared Type (Harmonic drive) High Positioning Accuracy Gear Ratio: 50, 100 	Not equipped	—	DC *1	AC DC	AC DC	AC
		Equipped	—	—	AC DC	AC DC	AC

*1 24 VDC only *2 **HPG** Geared Type is 40 mm *3 **AZM46** only *4 Geared Type only *5 **AZM98** only *6 Harmonic Geared Type is 30 mm

Note Please use the above values as reference to see the differences between each type. These values vary depending on the motor frame size and gear ratio.

Geared motors, which have been pre-assembled with gears, are offered as variants of the **AZ** Series.
Based on torque, accuracy (backlash), the optimal type can be selected from the various geared motors.

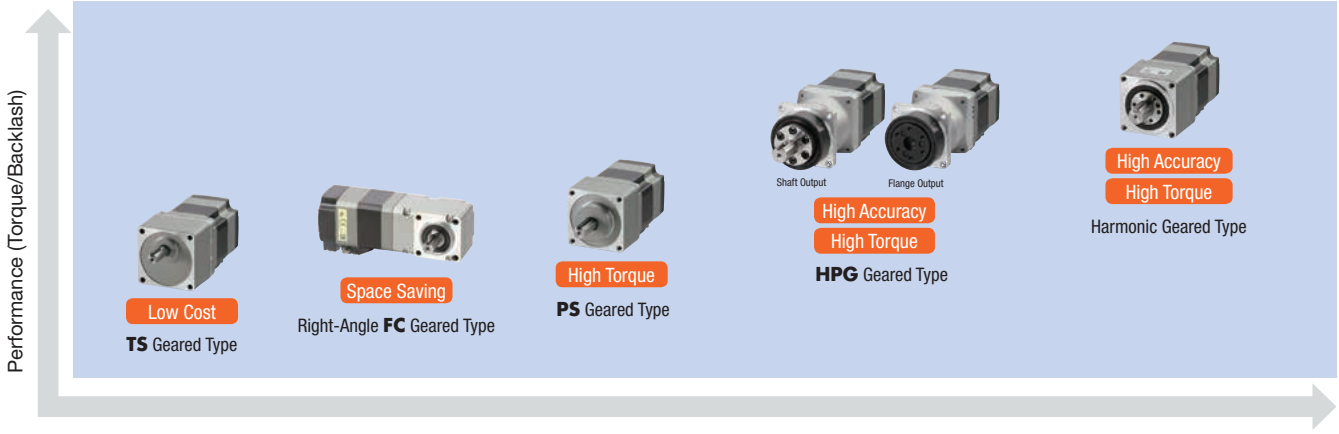

Permissible Torque and Max. Instantaneous Torque [N·m]	Backlash [arcmin]	Basic Resolution	Output Shaft Speed [r/min]
Max. Holding Torque 4	—	0.36	6000
Permissible Torque / Maximum Instantaneous Torque 25 45	10	0.012	833
Permissible Torque 10.5	10	0.012	416
Permissible Torque \ Maximum Instantaneous Torque 37 60	7	0.0072	600
Permissible Torque \ Maximum Instantaneous Torque 24 33	3	0.024	900
Permissible Torque \ Maximum Instantaneous Torque 52 107	0	0.0036	70

Driver

Type	
Network Compatible (EtherCAT, EtherNet/IP, PROFINET, MECHATROLINK, SSCNET III/H)	 AC DC
Built-in Controller FLEX, Modbus (RTU)	 AC DC
Pulse Input Type with RS-485 Communication Pulse Input	 AC DC
mini Driver (EtherCAT, EtherNet/IP, PROFINET, Modbus (RTU))	 DC
Network Compatible Multi-Axis Driver (EtherCAT, MECHATROLINK, SSCNET III/H)	 DC

●Standard Type Selection of Motor Shaft Shape

*Frame sizes 20 mm and 28 mm are only available with round shaft with a flat
*For frame size 42 mm, only the **AZM48** has a keyed shaft

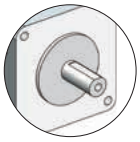
Round Shaft with Flat

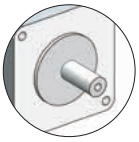
Straight Type


With Key

●Standard Type Horizontal Cable Outlet

Recommended when installing a motor in tight spaces or when motor cables may interfere with the equipment.

*DC input Frame sizes 42 mm and 60 mm only

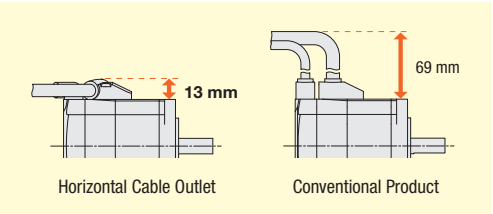

●TS Geared Type Selection of Cable Outlet Direction

Four directions can be selected for the output shaft.

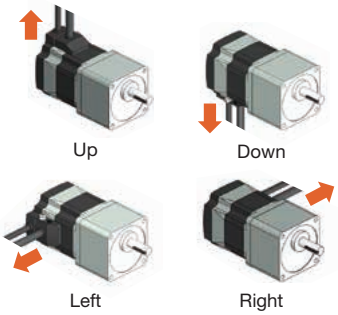

System Configuration

●Combination of Standard Type Motor with Electromagnetic Brake and Built-in Controller Type or Pulse Input Type Driver with RS-485 Communication

An example of a configuration using RS-485 communication or I/O control with a built-in controller type driver is shown below.
Motors, drivers, and connection cable sets/flexible connection cable sets need to be ordered individually.

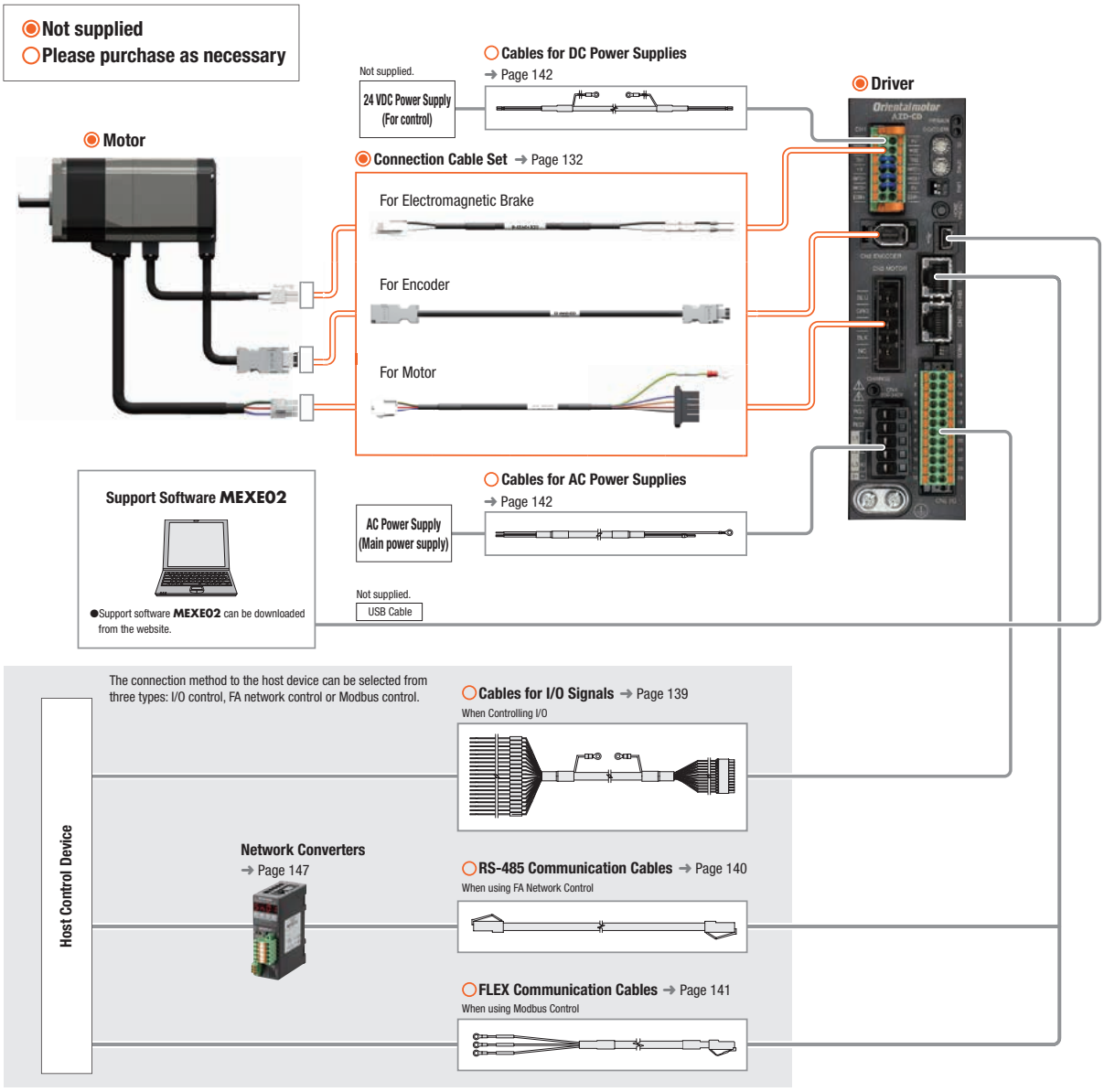

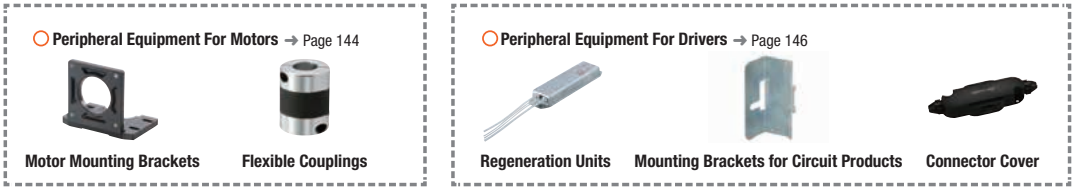

●Example of System Configuration

Motor		Driver		Cables			Peripheral Equipment		
				Connection Cable Set (1 m)	Cables for I/O Signals Connector Type (1 m)		Motor Mounting Brackets	Flexible Couplings	Mounting Brackets for Circuit Products
AZM66MC	+	AZD-CD	+	CC010VZFB	CC24D010C-1	+	PALW2P-5	XGT2-25C-10-10	MADP06
◉		◉		◉	○		○	○	○

● The system configuration shown above is an example. Other combinations are also available.

Note

● The motor cable and electromagnetic brake cable from the motor cannot be connected directly to the driver. When connecting to a driver, use a connection cable.

●Combination of Standard Type Motor with Electromagnetic Brake and Pulse Input Type Driver

An example of a single-axis system configuration with a programmable controller (equipped with pulse oscillation function) is shown below. Motors, drivers, and connection cable sets/flexible connection cable sets need to be ordered individually.

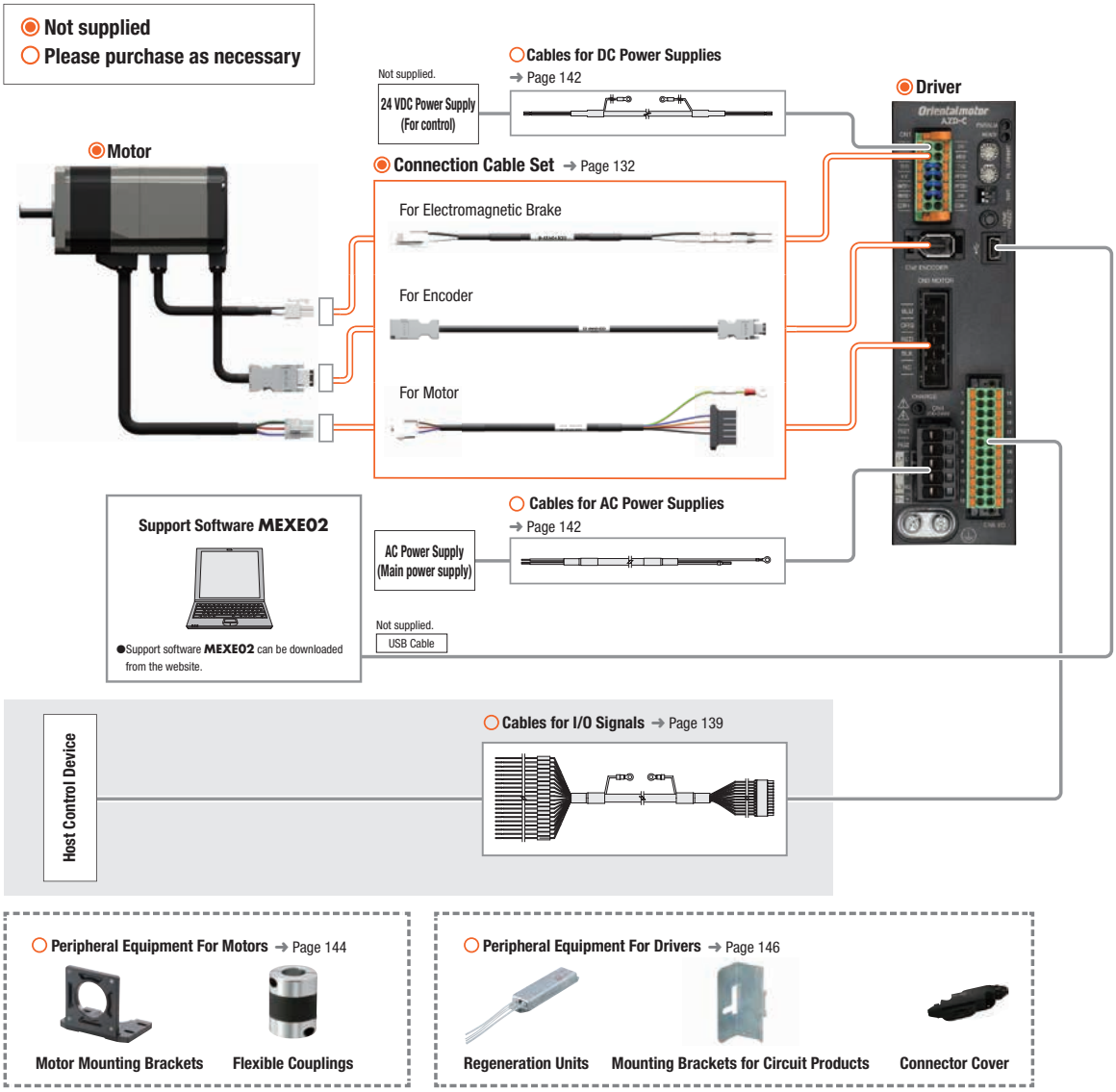

●Example of System Configuration

Motor		Driver		Cables			Peripheral Equipment		
				Connection Cable Set (1 m)	Cable Connector Type for I/O Signals (1 m)		Motor Mounting Brackets	Flexible Couplings	Mounting Brackets for Circuit Products
AZM66MC	+	AZD-C	+	CC010VZFB	CC24D010C-1	+	PALW2P-5	XGT2-25C-10-10	MADP06
◉		◉		◉	○		○	○	○

● The system configuration shown above is an example. Other combinations are also available.

Note

● The motor cable and electromagnetic brake cable from the motor cannot be connected directly to the driver. When connecting to a driver, use a connection cable.

●Combination of Standard Type Motor with Electromagnetic Brake and Network Compatible Driver

An example of a configuration using I/O control or EtherNet/IP with an EtherNet/IP compatible driver is shown below.
Motors, drivers, and connection cable sets/flexible connection cable sets need to be ordered individually.

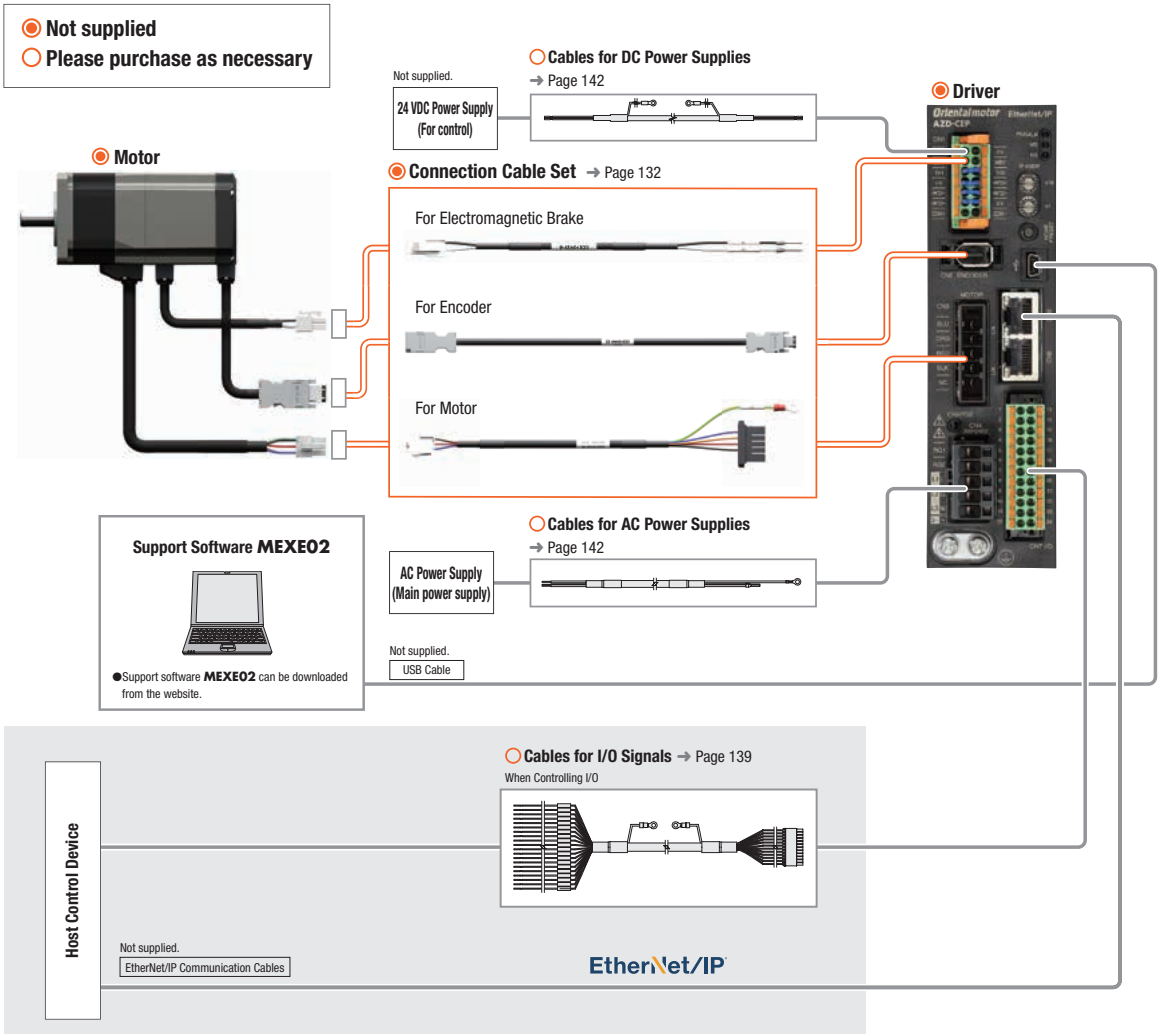

○ Peripheral Equipment For Motors → Page 144

Motor Mounting Brackets

Flexible Couplings

○ Peripheral Equipment For Drivers → Page 146

Regeneration Units

Mounting Brackets for Circuit Products

Connector Cover

●Example of System Configuration

Motor		Driver		Cables			Peripheral Equipment		
				Connection Cable Set (1 m)	Cables for I/O Signals Connector Type (1 m)		Motor Mounting Brackets	Flexible Couplings	Mounting Brackets for Circuit Products
AZM66MC	+	AZD-CEP	+	CC010VZFB	CC24D010C-1	+	PALW2P-5	XGT2-25C-10-10	MADP06
◉		◉		◉	○		○	○	○

● The system configuration shown above is an example. Other combinations are also available.

Note

● The motor cable and electromagnetic brake cable from the motor cannot be connected directly to the driver. When connecting to a driver, use a connection cable.

Product Number

●Motor

◇Standard Type

AZM 6 6 A 0 C

① ② ③ ④ ⑤ ⑥

①	Motor Type	**AZM**: **AZ** Series Motor
②	Motor Frame Size	**4**: 42 mm (**HPG** geared type is 40 mm) **6**: 60 mm **9**: 85 mm (Geared type is 90 mm)
③	Motor Case Length	
④	Output Shaft Type	**A**: Single Shaft **M**: Type with Electromagnetic Brake
⑤	Additional Function*	**0**: Straight **1**: With Key
⑥	Motor Type	**C**: AC Input Specification

◇**PS**, **HPG**, Harmonic Geared Type

AZM 6 6 A C - HP 15 F

① ② ③ ④ ⑥ ⑦ ⑧ ⑨

⑦	Geared Type	**PS**: **PS** Geared Type **HP**: **HPG** Geared Type **HS**: Harmonic Geared Type
⑧	Gear Ratio	
⑨	Output Shaft Type	**HPG** Geared Type Blank: Shaft Output **F**: Flange Output

*Standard type products without an additional function number have a round shaft with a single flat specification.

◇**TS** Geared Type

AZM 6 6 A C - TS 7.2 U

① ② ③ ④ ⑤ ⑥ ⑦ ⑧

①	Motor Type	**AZM**: **AZ** Series Motor
②	Motor Frame Size	**4**: 42 mm **6**: 60 mm **9**: 90 mm
③	Motor Case Length	
④	Output Shaft Type	**A**: Single Shaft **M**: Type with Electromagnetic Brake
⑤	Motor Type	**C**: AC Input Specification
⑥	Geared Type	**TS**: **TS** Geared Type
⑦	Gear Ratio	
⑧	Cable Outlet Direction	**U**: Up **L**: Left **R**: Right

◇**FC** Geared Type

AZM 6 6 A C - FC 7.2 U A

① ② ③ ④ ⑤ ⑥ ⑦ ⑧ ⑨

①	Motor Type	**AZM**: **AZ** Series Motor
②	Motor Frame Size	**4**: 42 mm **6**: 60 mm
③	Motor Case Length	
④	Output Shaft Type	**A**: Single Shaft **M**: Type with Electromagnetic Brake
⑤	Motor Type	**C**: AC Input Specification
⑥	Geared Type	**FC**: **FC** Geared Type
⑦	Gear Ratio	
⑧	Cable Outlet Direction*	**D**: Down **U**: Up
⑨	Identification	**A**: Solid Shaft

*The cable direction is as viewed from the gearhead with the output shaft facing left.

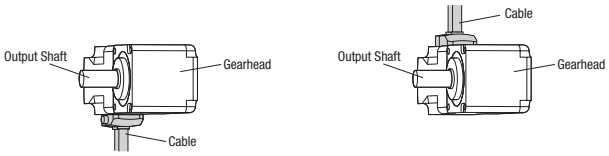

Cable Down Cable Up

●Driver

AZD - C D

① ② ③

①	Driver Type	**AZD**: **AZ** Series Driver
②	Power Supply Input	**A**: Single-Phase 100-120 VAC **C**: Single-Phase/ Three-Phase 200-240 VAC
③	Product Line	**D**: Built-in Controller Type **X**: Pulse Input Type with RS-485 Communication Blank: Pulse Input Type **EP**: EtherNet/IP compatible **ED**: EtherCAT Drive Profile compatible **PN**: PROFINET compatible **M3**: MECHATROLINK-Ⅲ compatible **S3**: SSCNETⅢ/H compatible

●Connection Cable Sets/Flexible Connection Cable Sets

CC 050 V Z F B

① ② ③ ④ ⑤ ⑥

①		**CC**: Cable
②	Length	**005**: 0.5 m **010**: 1 m **015**: 1.5 m **020**: 2 m **025**: 2.5 m **030**: 3 m **040**: 4 m **050**: 5 m **070**: 7 m **100**: 10 m **150**: 15 m **200**: 20 m
③	Reference Number	
④	Applicable Model	**Z**: For **AZ** Series
⑤	Cable Type	**F**: Connection Cable Sets **R**: Flexible Connection Cable Sets
⑥	Description	Blank: Without Electromagnetic Brake **B**: With Electromagnetic Brake

Product Line

Motors, drivers, and connection cables must be ordered individually.

●Motor

◇Standard Type

Frame Size	Product Name
42 mm	AZM46AC AZM46A0C AZM48AC AZM48A0C AZM48A1C
60 mm	AZM66AC AZM66A0C AZM66A1C AZM69AC AZM69A0C AZM69A1C
85 mm	AZM98AC AZM98A0C AZM98A1C AZM911AC AZM911A0C AZM911A1C

◇Standard Type with Electromagnetic Brake

Frame Size	Product Name
42 mm	AZM46MC AZM46M0C
60 mm	AZM66MC AZM66M0C AZM66M1C AZM69MC AZM69M0C AZM69M1C
85 mm	AZM98MC AZM98M0C AZM98M1C

◇**TS** Geared Type

Frame Size	Product Name
42 mm	AZM46AC-TS3.6 AZM46AC-TS3.6R AZM46AC-TS3.6U AZM46AC-TS3.6L AZM46AC-TS7.2 AZM46AC-TS7.2R AZM46AC-TS7.2U AZM46AC-TS7.2L AZM46AC-TS10 AZM46AC-TS10R AZM46AC-TS10U AZM46AC-TS10L AZM46AC-TS20 AZM46AC-TS20R AZM46AC-TS20U AZM46AC-TS20L AZM46AC-TS30 AZM46AC-TS30R AZM46AC-TS30U AZM46AC-TS30L
60 mm	AZM66AC-TS3.6 AZM66AC-TS3.6R AZM66AC-TS3.6U AZM66AC-TS3.6L AZM66AC-TS7.2 AZM66AC-TS7.2R AZM66AC-TS7.2U AZM66AC-TS7.2L AZM66AC-TS10 AZM66AC-TS10R AZM66AC-TS10U AZM66AC-TS10L AZM66AC-TS20 AZM66AC-TS20R AZM66AC-TS20U AZM66AC-TS20L AZM66AC-TS30 AZM66AC-TS30R AZM66AC-TS30U AZM66AC-TS30L

◇**TS** Geared Type with Electromagnetic Brake

Frame Size	Product Name
42 mm	AZM46MC-TS3.6 AZM46MC-TS3.6R AZM46MC-TS3.6U AZM46MC-TS3.6L AZM46MC-TS7.2 AZM46MC-TS7.2R AZM46MC-TS7.2U AZM46MC-TS7.2L AZM46MC-TS10 AZM46MC-TS10R AZM46MC-TS10U AZM46MC-TS10L AZM46MC-TS20 AZM46MC-TS20R AZM46MC-TS20U AZM46MC-TS20L AZM46MC-TS30 AZM46MC-TS30R AZM46MC-TS30U AZM46MC-TS30L
60 mm	AZM66MC-TS3.6 AZM66MC-TS3.6R AZM66MC-TS3.6U AZM66MC-TS3.6L AZM66MC-TS7.2 AZM66MC-TS7.2R AZM66MC-TS7.2U AZM66MC-TS7.2L AZM66MC-TS10 AZM66MC-TS10R AZM66MC-TS10U AZM66MC-TS10L AZM66MC-TS20 AZM66MC-TS20R AZM66MC-TS20U AZM66MC-TS20L AZM66MC-TS30 AZM66MC-TS30R AZM66MC-TS30U AZM66MC-TS30L

◇TS Geared Type

Frame Size	Product Name
90 mm	AZM98AC-TS3.6 AZM98AC-TS3.6R AZM98AC-TS3.6U AZM98AC-TS3.6L AZM98AC-TS7.2 AZM98AC-TS7.2R AZM98AC-TS7.2U AZM98AC-TS7.2L AZM98AC-TS10 AZM98AC-TS10R AZM98AC-TS10U AZM98AC-TS10L AZM98AC-TS20 AZM98AC-TS20R AZM98AC-TS20U AZM98AC-TS20L AZM98AC-TS30 AZM98AC-TS30R AZM98AC-TS30U AZM98AC-TS30L

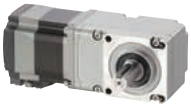

◇FC Geared Type

Frame Size	Product Name
42 mm	AZM46AC-FC7.2UA AZM46AC-FC7.2DA AZM46AC-FC10UA AZM46AC-FC10DA AZM46AC-FC20UA AZM46AC-FC20DA AZM46AC-FC30UA AZM46AC-FC30DA
60 mm	AZM66AC-FC7.2UA AZM66AC-FC7.2DA AZM66AC-FC10UA AZM66AC-FC10DA AZM66AC-FC20UA AZM66AC-FC20DA AZM66AC-FC30UA AZM66AC-FC30DA

◇PS Geared Type

Frame Size	Product Name
42 mm	AZM46AC-PS5 AZM46AC-PS7.2 AZM46AC-PS10 AZM46AC-PS25 AZM46AC-PS36 AZM46AC-PS50
60 mm	AZM66AC-PS5 AZM66AC-PS7.2 AZM66AC-PS10 AZM66AC-PS25 AZM66AC-PS36 AZM66AC-PS50
90 mm	AZM98AC-PS5 AZM98AC-PS7.2 AZM98AC-PS10 AZM98AC-PS25 AZM98AC-PS36 AZM98AC-PS50

◇TS Geared Type with Electromagnetic Brake

Frame Size	Product Name
90 mm	AZM98MC-TS3.6 AZM98MC-TS3.6R AZM98MC-TS3.6U AZM98MC-TS3.6L AZM98MC-TS7.2 AZM98MC-TS7.2R AZM98MC-TS7.2U AZM98MC-TS7.2L AZM98MC-TS10 AZM98MC-TS10R AZM98MC-TS10U AZM98MC-TS10L AZM98MC-TS20 AZM98MC-TS20R AZM98MC-TS20U AZM98MC-TS20L AZM98MC-TS30 AZM98MC-TS30R AZM98MC-TS30U AZM98MC-TS30L

◇FC Geared Type with Electromagnetic Brake

Frame Size	Product Name
42 mm	AZM46MC-FC7.2UA AZM46MC-FC7.2DA AZM46MC-FC10UA AZM46MC-FC10DA AZM46MC-FC20UA AZM46MC-FC20DA AZM46MC-FC30UA AZM46MC-FC30DA
60 mm	AZM66MC-FC7.2UA AZM66MC-FC7.2DA AZM66MC-FC10UA AZM66MC-FC10DA AZM66MC-FC20UA AZM66MC-FC20DA AZM66MC-FC30UA AZM66MC-FC30DA

◇PS Geared Type with Electromagnetic Brake

Frame Size	Product Name
42 mm	AZM46MC-PS5 AZM46MC-PS7.2 AZM46MC-PS10 AZM46MC-PS25 AZM46MC-PS36 AZM46MC-PS50
60 mm	AZM66MC-PS5 AZM66MC-PS7.2 AZM66MC-PS10 AZM66MC-PS25 AZM66MC-PS36 AZM66MC-PS50
90 mm	AZM98MC-PS5 AZM98MC-PS7.2 AZM98MC-PS10 AZM98MC-PS25 AZM98MC-PS36 AZM98MC-PS50

◇**HPG** Geared Type

Frame Size	Product Name
40 mm	**AZM46AC-HP5** **AZM46AC-HP5F** **AZM46AC-HP9** **AZM46AC-HP9F**
60 mm	**AZM66AC-HP5** **AZM66AC-HP5F** **AZM66AC-HP15** **AZM66AC-HP15F**
90 mm	**AZM98AC-HP5** **AZM98AC-HP5F** **AZM98AC-HP15** **AZM98AC-HP15F**

◇**HPG** Geared Type with Electromagnetic Brake

Frame Size	Product Name
40 mm	**AZM46MC-HP5** **AZM46MC-HP5F** **AZM46MC-HP9** **AZM46MC-HP9F**
60 mm	**AZM66MC-HP5** **AZM66MC-HP5F** **AZM66MC-HP15** **AZM66MC-HP15F**
90 mm	**AZM98MC-HP5** **AZM98MC-HP5F** **AZM98MC-HP15** **AZM98MC-HP15F**

◇Harmonic Geared Type

Frame Size	Product Name
42 mm	**AZM46AC-HS50** **AZM46AC-HS100**
60 mm	**AZM66AC-HS50** **AZM66AC-HS100**
90 mm	**AZM98AC-HS50** **AZM98AC-HS100**

◇Harmonic Geared Type with Electromagnetic Brake

Frame Size	Product Name
42 mm	**AZM46MC-HS50** **AZM46MC-HS100**
60 mm	**AZM66MC-HS50** **AZM66MC-HS100**
90 mm	**AZM98MC-HS50** **AZM98MC-HS100**

●Driver

◇Built-in Controller Type

Power Supply Input	Product Name
Single-Phase 100-120 VAC	**AZD-AD**
Single-Phase/Three-Phase 200-240 VAC	**AZD-CD**

◇Pulse Input Type with RS-485 Communication

Power Supply Input	Product Name
Single-Phase 100-120 VAC	**AZD-AX**
Single-Phase/Three-Phase 200-240 VAC	**AZD-CX**

◇Pulse Input Type

Power Supply Input	Product Name
Single-Phase 100-120 VAC	**AZD-A**
Single-Phase/Three-Phase 200-240 VAC	**AZD-C**

◇EtherNet/IP compatible

Power Supply Input	Product Name
Single-Phase 100-120 VAC	**AZD-AEP**
Single-Phase/Three-Phase 200-240 VAC	**AZD-CEP**

◇EtherCAT Drive Profile compatible

Power Supply Input	Product Name
Single-Phase 100-120 VAC	**AZD-AED**
Single-Phase/Three-Phase 200-240 VAC	**AZD-CED**

◇PROFINET compatible

Power Supply Input	Product Name
Single-Phase 100-120 VAC	**AZD-APN**
Single-Phase/Three-Phase 200-240 VAC	**AZD-CPN**

◇MECHATROLINK-Ⅲ compatible

Power Supply Input	Product Name
Single-Phase 100-120 VAC	**AZD-AM3**
Single-Phase/Three-Phase 200-240 VAC	**AZD-CM3**

◇SSCNETⅢ/H compatible

Power Supply Input	Product Name
Single-Phase 100-120 VAC	**AZD-AS3**
Single-Phase/Three-Phase 200-240 VAC	**AZD-CS3**

●Connection Cable Sets/Flexible Connection Cable Sets

Use the flexible connection cable set in applications where the cable is bent and flexed. Extension cables and flexible extension cables are also available. Refer to page 132.

Included Items

Motor

Type \ Included Items		Parallel Key	Motor Installation Screw
Standard Type	Round Shaft with Flat	–	–
	Straight Type	–	–
	With Key	1 Piece	–
TS Geared Type	Frame Size 42 mm	–	–
	Frame Size 60 mm	1 Piece	M4×60 P0.7 (4 screws)
	Frame Size 90 mm	1 Piece	M8×90 P1.25 (4 screws)
FC Geared Type		1 Piece	–
PS Geared Type		1 Piece	–
HPG Geared Type	Shaft Output	1 Piece	–
	Flange Output	–	–
Harmonic Geared Type		1 Piece	–

Driver

Type \ Included Items	Connector
Built-in Controller Type RS-485 Communication Pulse Input Type Pulse Input Type	· For CN1 (1 piece) · For CN4 (1 piece) · For CN5 (1 piece) · Connector Wiring Lever (1 piece)
EtherCAT Drive Profile compatible EtherNet/IP compatible PROFINET compatible	· For CN1 (1 piece) · For CN4 (1 piece) · For CN7 (1 piece) · Connector Wiring Lever (1 piece)
MECHATROLINK-Ⅲ compatible SSCNETⅢ/H compatible	· For CN1 (1 piece) · For CN4 (1 piece) · For CN5 (1 piece) · For CN6 (1 piece) · Connector Wiring Lever (1 piece) · Connector Cap for CN7 A, CN7 B (2 pieces)*

* SSCNETⅢ/H compatible included.

List of Combinations

Product Line	Type	Product Name
Motor	Standard Type	**AZM46□□C, AZM48A□C** **AZM66□□C, AZM69□□C** **AZM98□□C, AZM911A□C**
	TS Geared Type	**AZM46□C-TS□■** **AZM66□C-TS□■** **AZM98□C-TS□■**
	FC Geared Type	**AZM46□C-FC□■A** **AZM66□C-FC□■A**
	PS Geared Type	**AZM46□C-PS□** **AZM66□C-PS□** **AZM98□C-PS□**
	HPG Geared Type	**AZM46□C-HP□□** **AZM66□C-HP□□** **AZM98□C-HP□□**
	Harmonic Geared Type	**AZM46□C-HS□** **AZM66□C-HS□** **AZM98□C-HS□**

+

Product Line	Type	Product Name
Driver	Built-in Controller Type	**AZD-AD, AZD-CD**
	Pulse Input Type with RS-485 Communication	**AZD-AX, AZD-CX**
	Pulse Input Type	**AZD-A, AZD-C**
	EtherNet/IP compatible	**AZD-AEP, AZD-CEP**
	EtherCAT Drive Profile compatible	**AZD-AED, AZD-CED**
	PROFINET compatible	**AZD-APN, AZD-CPN**
	MECHATROLINK-Ⅲ compatible	**AZD-AM3, AZD-CM3**
	SSCNETⅢ/H compatible	**AZD-AS3, AZD-CS3**

+

Product Line	Type	Product Name
Connection Cable Sets/ Flexible Connection Cable Sets	Connection Cable Set	For Motor/Encoder: **CC◇◇◇VZF** For Motor/Encoder/Electromagnetic Brake: **CC◇◇◇VZFB**
	Flexible Connection Cable Sets	For Motor/Encoder: **CC◇◇◇VZR** For Motor/Encoder/Electromagnetic Brake: **CC◇◇◇VZRB**

● A letter or number indicating the following types is specified where the symbol is located in the product name.
- □: Output Shaft Configuration
- □: Additional Function
- □: Gear Ratio
- ■: Cable Outlet Direction
- □: Output Shaft Type
- ◇: Cable Length

Estimated Output of αSTEP AZ Series

For the servo motor's output (W), the output (W) when rotating at rated speed is shown in rated output power.
For high positioning accuracy, the mid- to low-speed, high-torque αSTEP **AZ** Series has no rated speed, so no rated output power is displayed.
The rated torque values of servo motors of various wattages that the torque of an **AZ** Series standard type motor is equivalent to are shown in the table below as reference.

AZ Series (Standard type)		Servo Motor of Equivalent Rated Torque (Reference)
Frame Size	Product Name	
42 mm	**AZM46** **AZM48**	50～100 W Rated Torque Equivalent
60 mm	**AZM66**	100～200 W Rated Torque Equivalent
	AZM69	200～400 W Rated Torque Equivalent
85 mm	**AZM98** **AZM911**	400～750 W Rated Torque Equivalent

✻The examples show the total amount for a motor, driver, and 1 m connection cable.

● Frame Size 42 mm

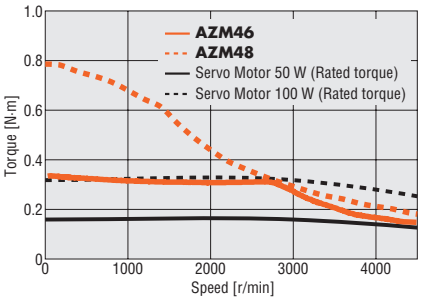

● Frame Size 60 mm

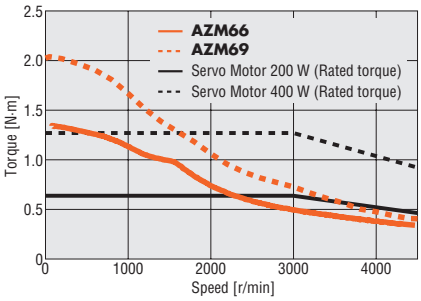

● Frame Size 85 mm

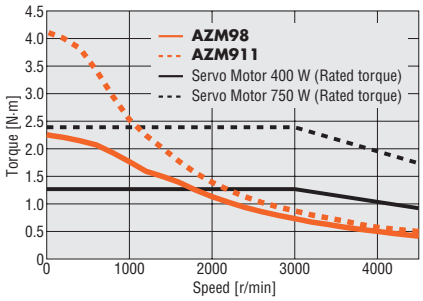

● Data for the speed – torque characteristics is based on Oriental Motor's internal measurement conditions. If the conditions are changed, the characteristics may also change as a result.

Standard Type Frame Size 42 mm, 60 mm, 85 mm

Specifications

Motor Product Name	Single Shaft	AZM46A□C	AZM48A□C	AZM66A□C	AZM69A□C	AZM98A□C	AZM911A□C
	With Electromagnetic Brake	AZM46M□C	–	AZM66M□C	AZM69M□C	AZM98M□C	–
Driver Product Name		AZD-A■, AZD-C■					
Max. Holding Torque	N·m	0.3	0.77	1.2	2	2	4
Holding Torque at Motor Standstill	Power ON N·m	0.15	0.38	0.6	1	1	2
	Electromagnetic Brake N·m	0.15	–	0.6	1	1	–
Rotor Inertia	J: kg·m^2	55×10^{-7} (71×10^{-7})*1	115×10^{-7}	370×10^{-7} (530×10^{-7})*1	740×10^{-7} (900×10^{-7})*1	1090×10^{-7} (1250×10^{-7})*1	2200×10^{-7}
Resolution	Resolution setting: 1000 P/R *2	0.36°/Pulse					
Power Supply Input		Check "■Driver Specifications" on page 34 for the driver current when combined with a motor.					
Control Power Supply							

- Either **0** (Straight) or **1** (With key) indicating the additional function is specified where the box □ is located in the product name. (**AZM46** is straight only)
  For round shaft with single flat, there is no character in the box □.
  A letter indicating the driver type is specified where the box ■ is located in the product name. Check "■ List of Combinations" on page 21 for driver product names.

*1 The value inside the ( ) represents the value when connecting an electromagnetic brake motor.
*2 For SSCNETⅢ/H compatible drivers, the resolution is fixed at 10,000 P/R.

Speed – Torque Characteristics (Reference values)

AZM46

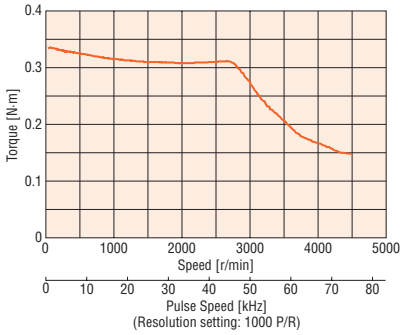

AZM48

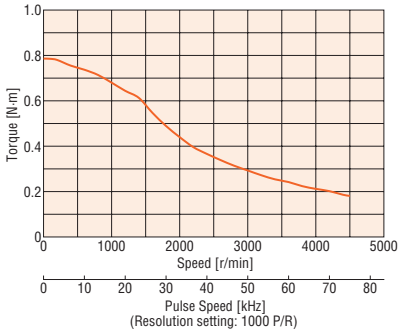

AZM66

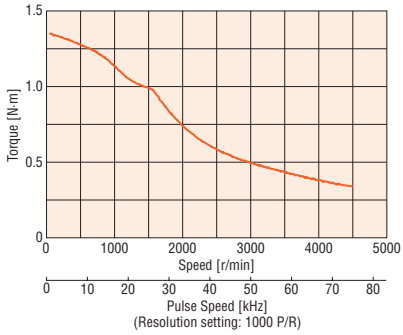

AZM69

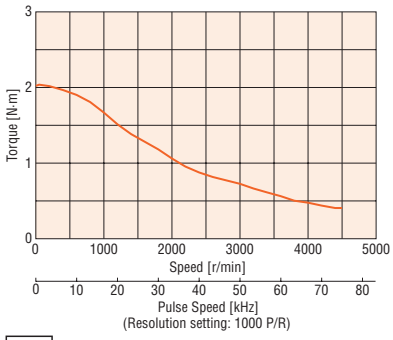

AZM98

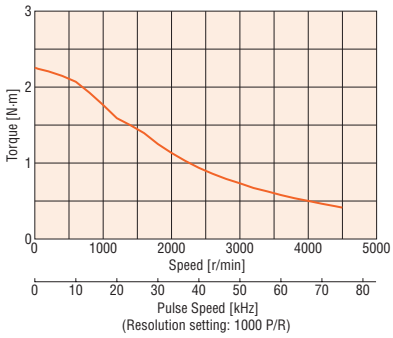

AZM911

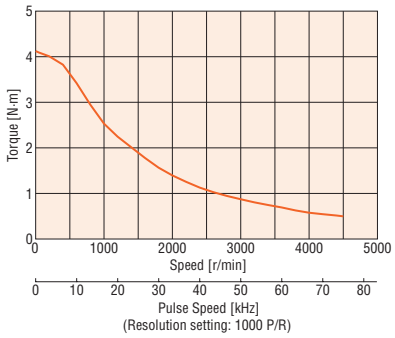

Note

- Data for the speed – torque characteristics is based on Oriental Motor's internal measurement conditions. If the conditions are changed, the characteristics may also change as a result.
- Depending on the driving conditions, a considerable amount of heat may be generated by the motor. To protect the absolute sensor, be sure to keep the temperature of the motor case at 80°C or less.
  (When conforming to the UL or CSA Standards, the temperature of the motor case must be kept at 75°C or less since the motor is recognized as heat-resistant class A.)
- For SSCNETⅢ/H compatible drivers, the resolution is fixed at 10,000 P/R.

Explanation of Terminology in Specifications Table

Max. holding torque		: This is the max. holding torque (holding force) the motor has when power is supplied (at rated current) but the motor is not rotating. (With geared types, the value of holding torque considers the permissible strength of the gear.)
Permissible torque		: This is the max. value of the torque continuously applied to the output gear shaft.
Max. instantaneous torque		: This is the max. torque that can be applied to the output gear shaft during acceleration/deceleration such when an inertial load is started and stopped.
Holding torque at motor standstill	While power is on	: This is the holding torque when the automatic current cutback function is active.
	Electromagnetic brake	: This is the static friction torque when the electromagnetic brake is activated at standstill. (Electromagnetic brake is power off activated type.)

TS Geared Type Frame Size 42 mm

Specifications

Motor Product Name	Single Shaft	AZM46AC-TS3.6□	AZM46AC-TS7.2□	AZM46AC-TS10□	AZM46AC-TS20□	AZM46AC-TS30□
	With Electromagnetic Brake	AZM46MC-TS3.6□	AZM46MC-TS7.2□	AZM46MC-TS10□	AZM46MC-TS20□	AZM46MC-TS30□
Driver Product Name		AZD-A■, AZD-C■				
Max. Holding Torque	N·m	0.65	1.2	1.7	2	2.3
Rotor Inertia	J: kg·m^2	55×10^{-7} (71×10^{-7})*1				
Gear Ratio		3.6	7.2	10	20	30
Resolution	Resolution setting: 1000 P/R *2	0.1°/Pulse	0.05°/Pulse	0.036°/Pulse	0.018°/Pulse	0.012°/Pulse
Permissible Torque	N·m	0.65	1.2	1.7	2	2.3
Maximum Instantaneous Torque	N·m	0.85	1.6	2	3	
Holding Torque at Motor Standstill	Power ON N·m	0.54	1	1.5	1.9	2.2
	Electromagnetic Brake N·m	0.54	1	1.5	1.9	2.2
Permissible Speed Range	r/min	0~833	0~416	0~300	0~150	0~100
Backlash	arcmin	45 (0.75°)	25 (0.42°)		15 (0.25°)	
Power Supply Input		Check "■Driver Specifications" on page 34 for the driver current when combined with a motor.				
Control Power Supply						

- Either **R** (Right), **U** (Up), or **L** (Left) indicating the cable outlet direction is specified where the box □ is located in the product name. For down, there is no character in the box □.
  A letter indicating the driver type is specified where the box ■ is located in the product name. Check "■ List of Combinations" on page 21 for driver product names.

*1 The value inside the ( ) represents the value when connecting an electromagnetic brake motor.
*2 For SSCNETⅢ/H compatible drivers, the resolution is fixed at 10,000 P/R.

Speed – Torque Characteristics (Reference values)

AZM46 Gear Ratio **3.6**

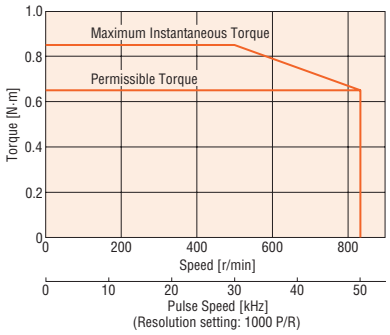

AZM46 Gear Ratio **7.2**

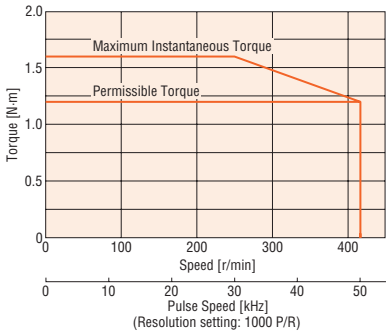

AZM46 Gear Ratio **10**

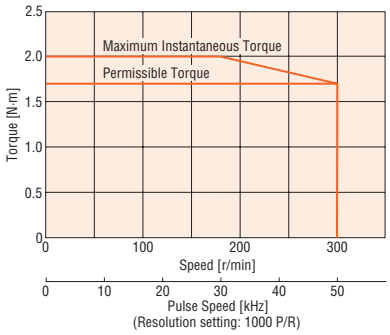

AZM46 Gear Ratio **20**

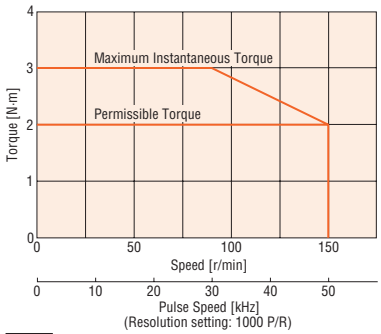

AZM46 Gear Ratio **30**

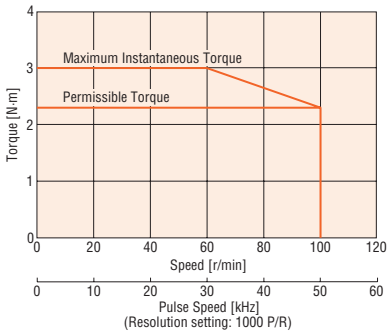

Note

- Data for the speed – torque characteristics is based on Oriental Motor's internal measurement conditions. If the conditions are changed, the characteristics may also change as a result.
- Depending on the driving conditions, a considerable amount of heat may be generated by the motor. To protect the absolute sensor, be sure to keep the temperature of the motor case at 80°C or less. (When conforming to the UL or CSA Standards, the temperature of the motor case must be kept at 75°C or less since the motor is recognized as heat-resistant class A.)
- For SSCNETⅢ/H compatible drivers, the resolution is fixed at 10,000 P/R.

TS Geared Type Frame Size 60 mm

Specifications

Motor Product Name	Single Shaft	AZM66AC-TS3.6□	AZM66AC-TS7.2□	AZM66AC-TS10□	AZM66AC-TS20□	AZM66AC-TS30□
	With Electromagnetic Brake	AZM66MC-TS3.6□	AZM66MC-TS7.2□	AZM66MC-TS10□	AZM66MC-TS20□	AZM66MC-TS30□
Driver Product Name		AZD-A■, AZD-C■				
Max. Holding Torque	N·m	1.8	3	4	5	6
Rotor Inertia	J: kg·m^2	370×10^{-7} (530×10^{-7})*1				
Gear Ratio		3.6	7.2	10	20	30
Resolution	Resolution setting: 1000 P/R *2	0.1°/Pulse	0.05°/Pulse	0.036°/Pulse	0.018°/Pulse	0.012°/Pulse
Permissible Torque	N·m	1.8	3	4	5	6
Max. Instantaneous Torque*	N·m	*	4.5	6	8	10
Holding Torque at Motor Standstill	Power ON N·m	1.3	2.6	3.7	5	6
	Electromagnetic Brake N·m	1.3	2.6	3.7	5	6
Permissible Speed Range	r/min	0~833	0~416	0~300	0~150	0~100
Backlash	arcmin	35 (0.59°)	15 (0.25°)		10 (0.17°)	
Power Supply Input		Check "■Driver Specifications" on page 34 for the driver current when combined with a motor.				
Control Power Supply						

- Either **R** (Right), **U** (Up), or **L** (Left) indicating the cable outlet direction is specified where the box □ is located in the product name. For down, there is no character in the box □.
  A letter indicating the driver type is specified where the box ■ is located in the product name. Check "■ List of Combinations" on page 21 for driver product names.

* For the geared motor output torque, refer to the speed–torque characteristics.

*1 The value inside the ( ) represents the value when connecting an electromagnetic brake motor.

*2 For SSCNETⅢ/H compatible drivers, the resolution is fixed at 10,000 P/R.

Speed – Torque Characteristics (Reference values)

AZM66 Gear Ratio **3.6**

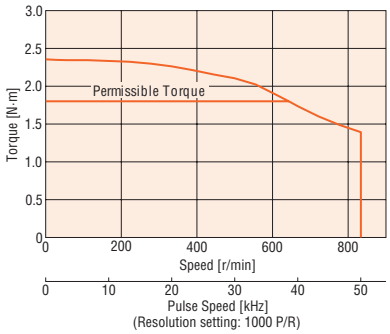

AZM66 Gear Ratio **7.2**

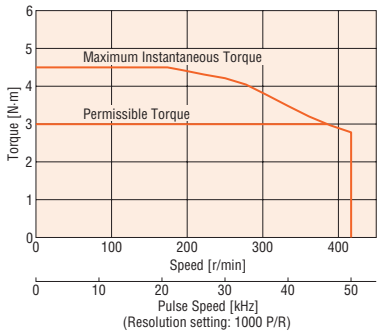

AZM66 Gear Ratio **10**

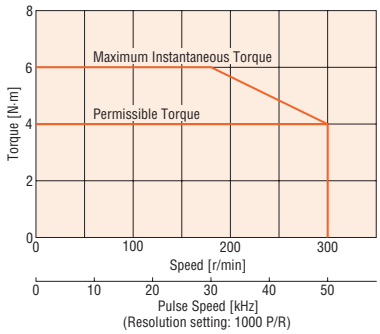

AZM66 Gear Ratio **20**

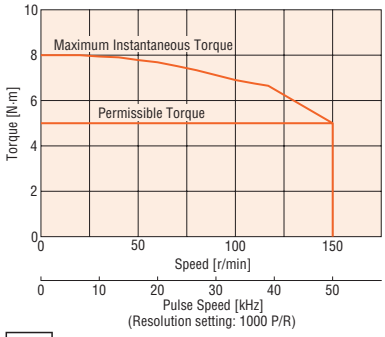

AZM66 Gear Ratio **30**

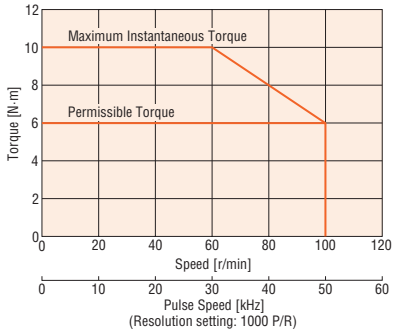

Note

- Data for the speed – torque characteristics is based on Oriental Motor's internal measurement conditions. If the conditions are changed, the characteristics may also change as a result.
- Depending on the driving conditions, a considerable amount of heat may be generated by the motor. To protect the absolute sensor, be sure to keep the temperature of the motor case at 80°C or less. (When conforming to the UL or CSA Standards, the temperature of the motor case must be kept at 75°C or less since the motor is recognized as heat-resistant class A.)
- For SSCNETⅢ/H compatible drivers, the resolution is fixed at 10,000 P/R.

TS Geared Type Frame Size 90 mm

Specifications

Motor Product Name	Single Shaft	AZM98AC-TS3.6□	AZM98AC-TS7.2□	AZM98AC-TS10□	AZM98AC-TS20□	AZM98AC-TS30□
	With Electromagnetic Brake	AZM98MC-TS3.6□	AZM98MC-TS7.2□	AZM98MC-TS10□	AZM98MC-TS20□	AZM98MC-TS30□
Driver Product Name		AZD-A■, AZD-C■				
Max. Holding Torque	N·m	6	10	14	20	25
Rotor Inertia	J: kg·m^2	1090×10^{-7} (1250×10^{-7})✻1				
Gear Ratio		3.6	7.2	10	20	30
Resolution	Resolution setting: 1000 P/R ✻2	0.1°/Pulse	0.05°/Pulse	0.036°/Pulse	0.018°/Pulse	0.012°/Pulse
Permissible Torque	N·m	6	10	14	20	25
Max. Instantaneous Torque✻	N·m	✻	✻	20	✻	45
Holding Torque at Motor Standstill	Power ON N·m	3.6	7.2	10	20	25
	Electromagnetic Brake N·m	3.6	7.2	10	20	25
Permissible Speed Range	r/min	0~833	0~416	0~300	0~150	0~100
Backlash	arcmin	25 (0.42°)	15 (0.25°)		10 (0.17°)	
Power Supply Input		Check "■Driver Specifications" on page 34 for the driver current when combined with a motor.				
Control Power Supply						

● Either **R** (Right), **U** (Up), or **L** (Left) indicating the cable outlet direction is specified where the box □ is located in the product name. For down, there is no character in the box □.
A letter indicating the driver type is specified where the box ■ is located in the product name. Check "■ List of Combinations" on page 21 for driver product names.

✻ For the geared motor output torque, refer to the speed–torque characteristics.

✻1 The value inside the ( ) represents the value when connecting an electromagnetic brake motor.

✻2 For SSCNETⅢ/H compatible drivers, the resolution is fixed at 10,000 P/R.

Speed – Torque Characteristics (Reference values)

AZM98 Gear Ratio **3.6**

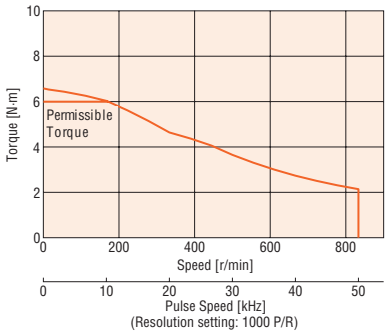

AZM98 Gear Ratio **7.2**

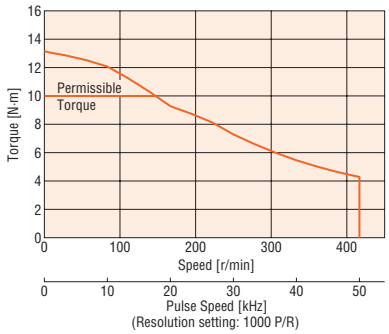

AZM98 Gear Ratio **10**

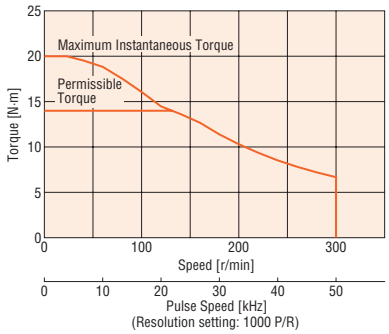

AZM98 Gear Ratio **20**

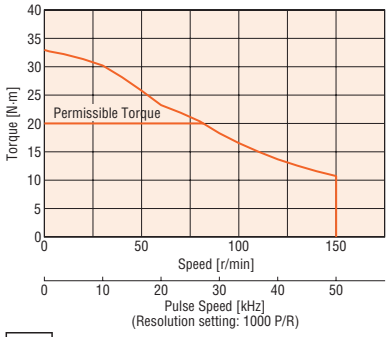

AZM98 Gear Ratio **30**

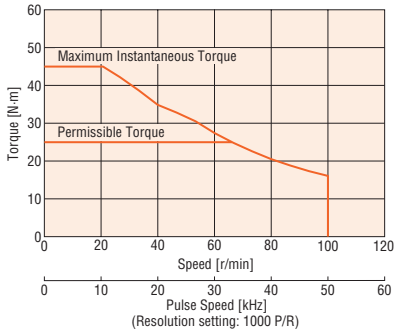

Note

● Data for the speed – torque characteristics is based on Oriental Motor's internal measurement conditions. If the conditions are changed, the characteristics may also change as a result.

● Depending on the driving conditions, a considerable amount of heat may be generated by the motor. To protect the absolute sensor, be sure to keep the temperature of the motor case at 80°C or less. (When conforming to the UL or CSA Standards, the temperature of the motor case must be kept at 75°C or less since the motor is recognized as heat-resistant class A.)

● For SSCNETⅢ/H compatible drivers, the resolution is fixed at 10,000 P/R.

FC Geared Type Frame Size 42 mm

Specifications

Motor Product Name	Single Shaft	AZM46AC-FC7.2□A	AZM46AC-FC10□A	AZM46AC-FC20□A	AZM46AC-FC30□A
	With Electromagnetic Brake	AZM46MC-FC7.2□A	AZM46MC-FC10□A	AZM46MC-FC20□A	AZM46MC-FC30□A
Driver Product Name		AZD-A■, AZD-C■			
Max. Holding Torque	N·m	0.7	1	2	3
Rotor Inertia	J: kg·m^2	55×10^{-7} (71×10^{-7})*1			
Gear Ratio		7.2	10	20	30
Resolution	Resolution setting: 1000 P/R *2	0.05°/Pulse	0.036°/Pulse	0.018°/Pulse	0.012°/Pulse
Permissible Torque	N·m	0.7	1	2	3
Holding Torque at Motor Standstill	Power ON N·m	0.7	1	2	3
	Electromagnetic Brake N·m	0.7	1	2	3
Permissible Speed Range	r/min	0~416	0~300	0~150	0~100
Backlash	arcmin	25 (0.42°)		15 (0.25°)	
Power Supply Input		Check "■Driver Specifications" on page 34 for the driver current when combined with a motor.			
Control Power Supply					

● Either **U** (Up) or **D** (Down) indicating the cable outlet direction is specified where the box □ is located in the product name.
A letter indicating the driver type is specified where the box ■ is located in the product name. Check "■List of Combinations" on page 21 for driver product names.
*1 The value inside the ( ) represents the value when connecting an electromagnetic brake motor.
*2 For SSCNETⅢ/H compatible drivers, the resolution is fixed at 10,000 P/R.

Speed – Torque Characteristics (Reference values)

AZM46 Gear Ratio **7.2**

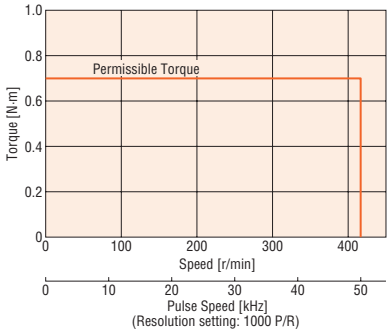

AZM46 Gear Ratio **10**

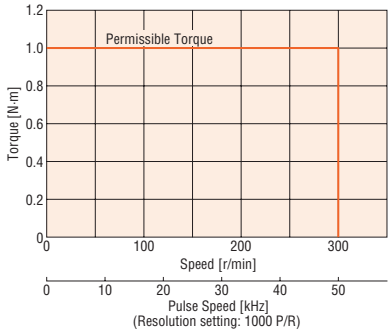

AZM46 Gear Ratio **20**

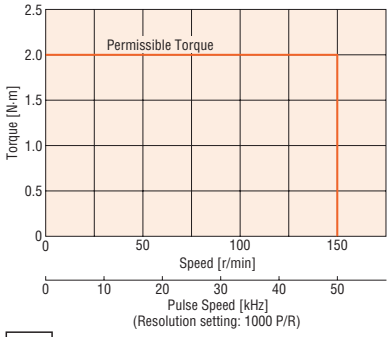

AZM46 Gear Ratio **30**

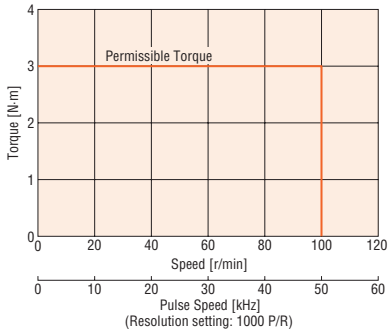

Note

● Data for the speed – torque characteristics is based on Oriental Motor's internal measurement conditions. If the conditions are changed, the characteristics may also change as a result.
● Depending on the driving conditions, a considerable amount of heat may be generated by the motor. To protect the absolute sensor, be sure to keep the temperature of the motor case at 80°C or less. (When conforming to the UL or CSA Standards, the temperature of the motor case must be kept at 75°C or less since the motor is recognized as heat-resistant class A.)
● For SSCNETⅢ/H compatible drivers, the resolution is fixed at 10,000 P/R.

FC Geared Type Frame Size 60 mm

Specifications

Motor Product Name	Single Shaft	AZM66AC-FC7.2□A	AZM66AC-FC10□A	AZM66AC-FC20□A	AZM66AC-FC30□A
	With Electromagnetic Brake	AZM66MC-FC7.2□A	AZM66MC-FC10□A	AZM66MC-FC20□A	AZM66MC-FC30□A
Driver Product Name		AZD-A■, AZD-C■			
Max. Holding Torque	N·m	2.5	3.5	7	10.5
Rotor Inertia	J: kg·m^2	370×10^{-7} (530×10^{-7})*1			
Gear Ratio		7.2	10	20	30
Resolution	Resolution setting: 1000 P/R *2	0.05°/Pulse	0.036°/Pulse	0.018°/Pulse	0.012°/Pulse
Permissible Torque	N·m	2.5	3.5	7	10.5
Holding Torque at Motor Standstill	Power ON N·m	2.5	3.5	7	10.5
	Electromagnetic Brake N·m	2.5	3.5	7	10.5
Permissible Speed Range	r/min	0~416	0~300	0~150	0~100
Backlash	arcmin	15 (0.25°)		10 (0.17°)	
Power Supply Input		Check "■Driver Specifications" on page 34 for the driver current when combined with a motor.			
Control Power Supply					

● Either **U** (Up) or **D** (Down) indicating the cable outlet direction is specified where the box □ is located in the product name.
A letter indicating the driver type is specified where the box ■ is located in the product name. Check "■List of Combinations" on page 21 for driver product names.
*1 The value inside the ( ) represents the value when connecting an electromagnetic brake motor.
*2 For SSCNETⅢ/H compatible drivers, the resolution is fixed at 10,000 P/R.

Speed – Torque Characteristics (Reference values)

AZM66 Gear Ratio **7.2**

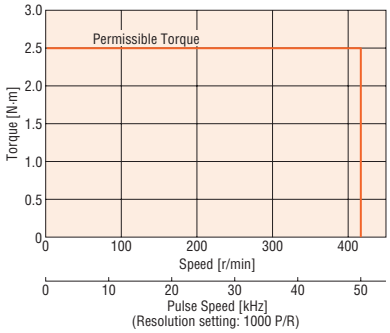

AZM66 Gear Ratio **10**

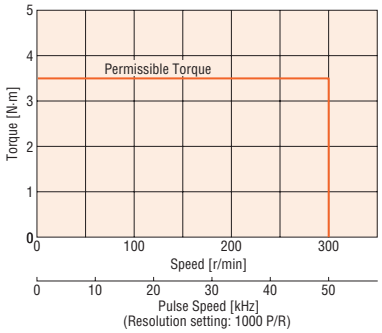

AZM66 Gear Ratio **20**

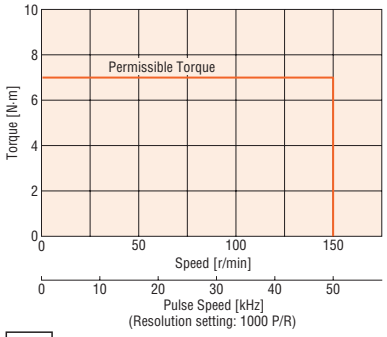

AZM66 Gear Ratio **30**

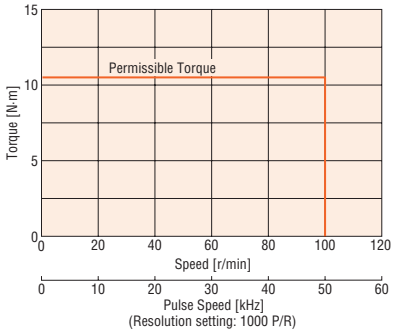

Note

● Data for the speed – torque characteristics is based on Oriental Motor's internal measurement conditions. If the conditions are changed, the characteristics may also change as a result.
● Depending on the driving conditions, a considerable amount of heat may be generated by the motor. To protect the absolute sensor, be sure to keep the temperature of the motor case at 80°C or less.
(When conforming to the UL or CSA Standards, the temperature of the motor case must be kept at 75°C or less since the motor is recognized as heat-resistant class A.)
● For SSCNETⅢ/H compatible drivers, the resolution is fixed at 10,000 P/R.

PS Geared Type Frame Size 42 mm

Specifications

Motor Product Name	Single Shaft	AZM46AC-PS5	AZM46AC-PS7.2	AZM46AC-PS10	AZM46AC-PS25	AZM46AC-PS36	AZM46AC-PS50
	With Electromagnetic Brake	AZM46MC-PS5	AZM46MC-PS7.2	AZM46MC-PS10	AZM46MC-PS25	AZM46MC-PS36	AZM46MC-PS50
Driver Product Name		AZD-A■, AZD-C■					
Max. Holding Torque	N·m	1	1.5		2.5	3	
Rotor Inertia	J: kg·m^2	55×10^{-7} (71×10^{-7})✻1					
Gear Ratio		5	7.2	10	25	36	50
Resolution	Resolution setting: 1000 P/R ✻2	0.072°/Pulse	0.05°/Pulse	0.036°/Pulse	0.0144°/Pulse	0.01°/Pulse	0.0072°/Pulse
Permissible Torque	N·m	1	1.5		2.5	3	
Maximum Instantaneous Torque	N·m	1.5	2		6		
Holding Torque at Motor Standstill	Power ON N·m	0.75	1	1.5	2.5	3	
	Electromagnetic Brake N·m	0.75	1	1.5	2.5	3	
Permissible Speed Range	r/min	0~600	0~416	0~300	0~120	0~83	0~60
Backlash	arcmin	15 (0.25°)					
Power Supply Input		Check "■Driver Specifications" on page 34 for the driver current when combined with a motor.					
Control Power Supply							

● A letter indicating the driver type is specified where the box ■ is located in the product name. Check "■List of Combinations" on page 21 for driver product names.

✻1 The value inside the ( ) represents the value when connecting an electromagnetic brake motor.

✻2 For SSCNETⅢ/H compatible drivers, the resolution is fixed at 10,000 P/R.

Speed – Torque Characteristics (Reference values)

AZM46 Gear Ratio **5**

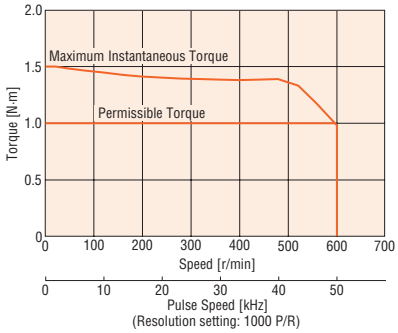

AZM46 Gear Ratio **7.2**

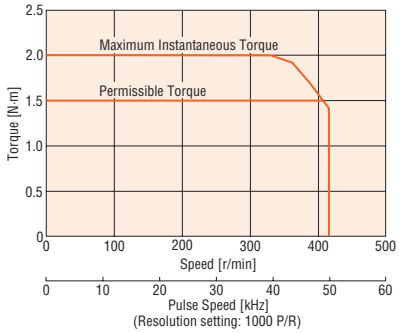

AZM46 Gear Ratio **10**

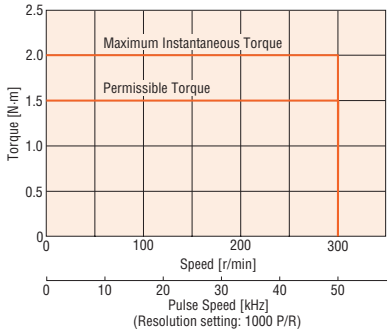

AZM46 Gear Ratio **25**

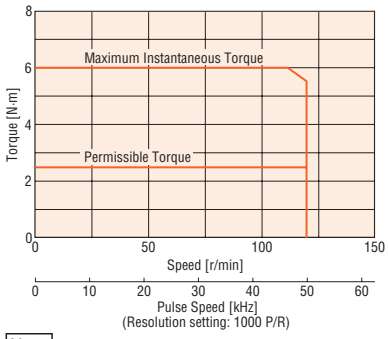

AZM46 Gear Ratio **36**

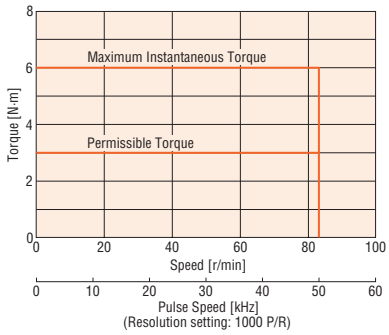

AZM46 Gear Ratio **50**

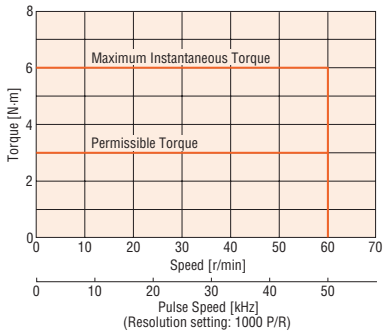

Note

● Data for the speed – torque characteristics is based on Oriental Motor's internal measurement conditions. If the conditions are changed, the characteristics may also change as a result.

● Depending on the driving conditions, a considerable amount of heat may be generated by the motor. To protect the absolute sensor, be sure to keep the temperature of the motor case at 80°C or less. (When conforming to the UL or CSA Standards, the temperature of the motor case must be kept at 75°C or less since the motor is recognized as heat-resistant class A.)

● For SSCNETⅢ/H compatible drivers, the resolution is fixed at 10,000 P/R.

PS Geared Type Frame Size 60 mm

Specifications

Motor Product Name	Single Shaft	AZM66AC-PS5	AZM66AC-PS7.2	AZM66AC-PS10	AZM66AC-PS25	AZM66AC-PS36	AZM66AC-PS50
	With Electromagnetic Brake	AZM66MC-PS5	AZM66MC-PS7.2	AZM66MC-PS10	AZM66MC-PS25	AZM66MC-PS36	AZM66MC-PS50
Driver Product Name		AZD-A■, AZD-C■					
Max. Holding Torque	N·m	3.4	4	5	8		
Rotor Inertia	J: kg·m^2	370×10^{-7} (530×10^{-7})✻1					
Gear Ratio		5	7.2	10	25	36	50
Resolution	Resolution setting: 1000 P/R ✻2	0.072°/Pulse	0.05°/Pulse	0.036°/Pulse	0.0144°/Pulse	0.01°/Pulse	0.0072°/Pulse
Permissible Torque	N·m	3.5	4	5	8		
Max. Instantaneous Torque✻	N·m	✻	✻	11	16	20	
Holding Torque at Motor Standstill	Power ON N·m	3	4	5	8		
	Electromagnetic Brake N·m	3	4	5	8		
Permissible Speed Range	r/min	0~600	0~416	0~300	0~120	0~83	0~60
Backlash	arcmin	7 (0.12°)			9 (0.15°)		
Power Supply Input		Check "■Driver Specifications" on page 34 for the driver current when combined with a motor.					
Control Power Supply							

● A letter indicating the driver type is specified where the box ■ is located in the product name. Check "■ List of Combinations" on page 21 for driver product names.

✻ For the geared motor output torque, refer to the speed–torque characteristics.

✻1 The value inside the ( ) represents the value when connecting an electromagnetic brake motor.

✻2 For SSCNETⅢ/H compatible drivers, the resolution is fixed at 10,000 P/R.

Speed – Torque Characteristics (Reference values)

AZM66 Gear Ratio **5**

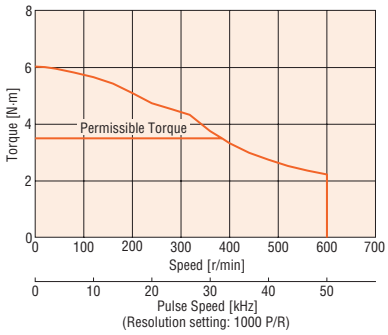

AZM66 Gear Ratio **7.2**

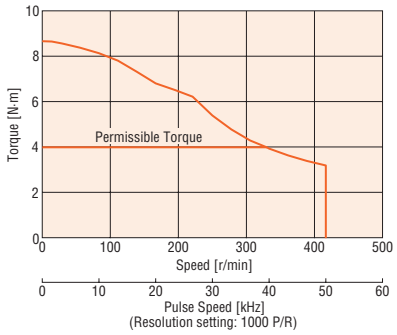

AZM66 Gear Ratio **10**

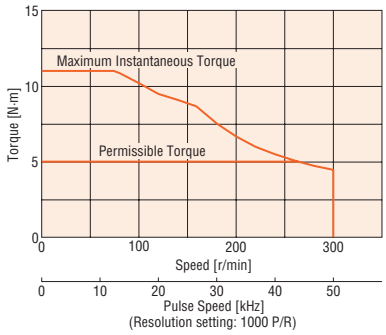

AZM66 Gear Ratio **25**

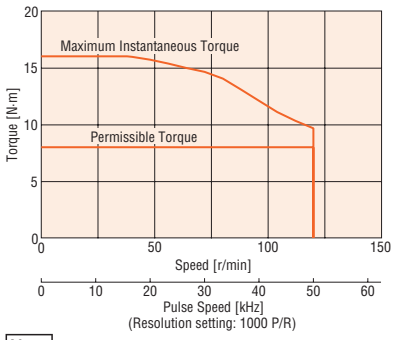

AZM66 Gear Ratio **36**

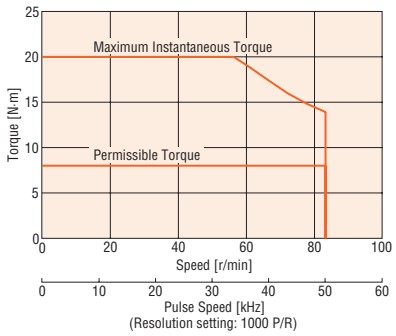

AZM66 Gear Ratio **50**

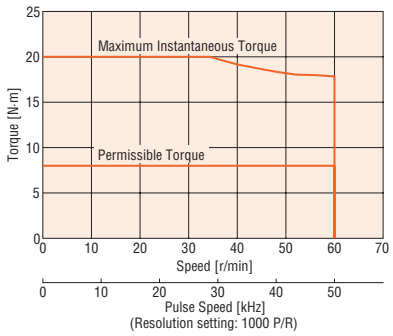

Note

● Data for the speed – torque characteristics is based on Oriental Motor's internal measurement conditions. If the conditions are changed, the characteristics may also change as a result.

● Depending on the driving conditions, a considerable amount of heat may be generated by the motor. To protect the absolute sensor, be sure to keep the temperature of the motor case at 80°C or less. (When conforming to the UL or CSA Standards, the temperature of the motor case must be kept at 75°C or less since the motor is recognized as heat-resistant class A.)

● For SSCNETⅢ/H compatible drivers, the resolution is fixed at 10,000 P/R.

PS Geared Type Frame Size 90 mm

Specifications

Motor Product Name	Single Shaft	AZM98AC-PS5	AZM98AC-PS7.2	AZM98AC-PS10	AZM98AC-PS25	AZM98AC-PS36	AZM98AC-PS50
	With Electromagnetic Brake	AZM98MC-PS5	AZM98MC-PS7.2	AZM98MC-PS10	AZM98MC-PS25	AZM98MC-PS36	AZM98MC-PS50
Driver Product Name		AZD-A■, AZD-C■					
Max. Holding Torque	N·m	10	14	20	37		
Rotor Inertia	J: kg·m^2	1090×10^{-7} (1250×10^{-7})✻1					
Gear Ratio		5	7.2	10	25	36	50
Resolution	Resolution setting: 1000 P/R ✻2	0.072°/Pulse	0.05°/Pulse	0.036°/Pulse	0.0144°/Pulse	0.01°/Pulse	0.0072°/Pulse
Permissible Torque✻	N·m	✻	✻	20	37		
Max. Instantaneous Torque✻	N·m	✻	✻	✻	✻	60	
Holding Torque at Motor Standstill	Power ON N·m	5	7.2	10	25	36	37
	Electromagnetic Brake N·m	5	7.2	10	25	36	37
Permissible Speed Range	r/min	0~600	0~416	0~300	0~120	0~83	0~60
Backlash	arcmin	7 (0.12°)			9 (0.15°)		
Power Supply Input		Check "■Driver Specifications" on page 34 for the driver current when combined with a motor.					
Control Power Supply							

● A letter indicating the driver type is specified where the box ■ is located in the product name. Check "■ List of Combinations" on page 21 for driver product names.

✻ For the geared motor output torque, refer to the speed–torque characteristics.

✻1 The value inside the ( ) represents the value when connecting an electromagnetic brake motor.

✻2 For SSCNETⅢ/H compatible drivers, the resolution is fixed at 10,000 P/R.

Speed – Torque Characteristics (Reference values)

AZM98 Gear Ratio **5**

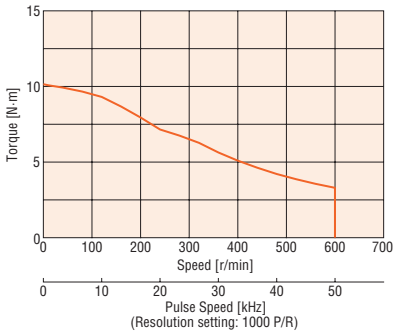

AZM98 Gear Ratio **7.2**

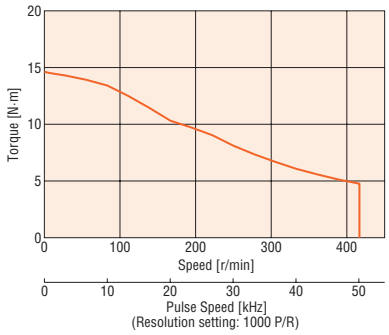

AZM98 Gear Ratio **10**

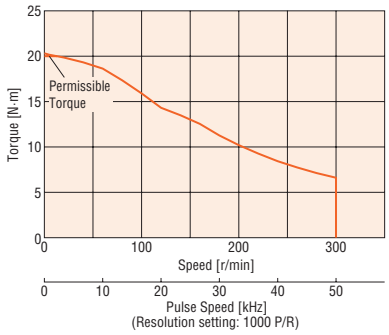

AZM98 Gear Ratio **25**

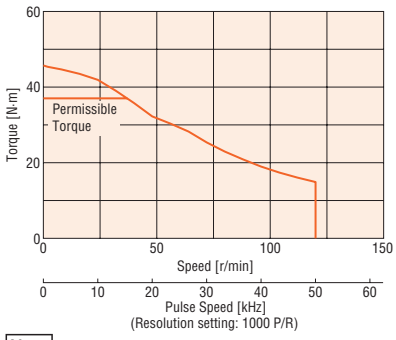

AZM98 Gear Ratio **36**

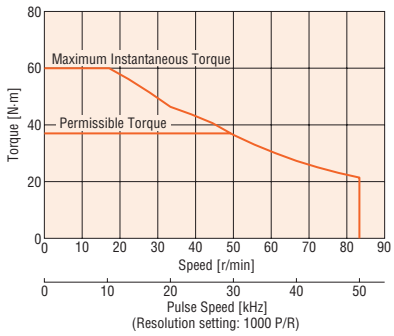

AZM98 Gear Ratio **50**

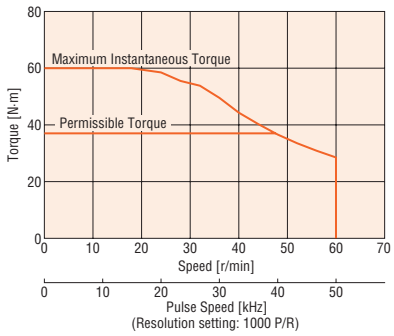

Note

● Data for the speed – torque characteristics is based on Oriental Motor's internal measurement conditions. If the conditions are changed, the characteristics may also change as a result.

● Depending on the driving conditions, a considerable amount of heat may be generated by the motor. To protect the absolute sensor, be sure to keep the temperature of the motor case at 80°C or less. (When conforming to the UL or CSA Standards, the temperature of the motor case must be kept at 75°C or less since the motor is recognized as heat-resistant class A.)

● For SSCNETⅢ/H compatible drivers, the resolution is fixed at 10,000 P/R.

HPG Geared Type Frame Size 40 mm, 60 mm, 90 mm

Specifications

Motor Product Name	Single Shaft	AZM46AC-HP5□	AZM46AC-HP9□	AZM66AC-HP5□	AZM66AC-HP15□	AZM98AC-HP5□	AZM98AC-HP15□
	With Electromagnetic Brake	AZM46MC-HP5□	AZM46MC-HP9□	AZM66MC-HP5□	AZM66MC-HP15□	AZM98MC-HP5□	AZM98MC-HP15□
Driver Product Name		AZD-A■, AZD-C■					
Max. Holding Torque	N·m	1.5	2.5	5.9	9	10	24
Rotor Inertia	J: kg·m^2	55×10^{-7} (71×10^{-7})*1		370×10^{-7} (530×10^{-7})*1		1090×10^{-7} (1250×10^{-7})*1	
Inertia*2	J: kg·m^2	5.8×10^{-7} (4.2×10^{-7})	3.4×10^{-7} (2.9×10^{-7})	92×10^{-7} (86×10^{-7})	78×10^{-7} (77×10^{-7})	629×10^{-7} (589×10^{-7})	488×10^{-7} (488×10^{-7})
Gear Ratio		5	9	5	15	5	15
Resolution	Resolution setting: 1000 P/R *3	0.072°/Pulse	0.04°/Pulse	0.072°/Pulse	0.024°/Pulse	0.072°/Pulse	0.024°/Pulse
Permissible Torque*	N·m	*	2.5	5.9	9	*	24
Max. Instantaneous Torque*	N·m	*	*	*	*	*	*
Holding Torque at Motor Standstill	Power ON N·m	0.75	1.35	3	9	5	15
	Electromagnetic Brake N·m	0.75	1.35	3	9	5	15
Permissible Speed Range	r/min	0~900	0~500	0~900	0~300	0~900	0~300
Backlash	arcmin	3 (0.05°)					
Output Flange Surface Runout*4	mm	0.02					
Output Flange Inner Runout*4	mm	0.03		0.04			
Power Supply Input		Check "■Driver Specifications" on page 34 for the driver current when combined with a motor.					
Control Power Supply							

● For the flange output type, **F** is specified where the box □ is located in the product name.
A letter indicating the driver type is specified where the box ■ is located in the product name. Check "■List of Combinations" on page 21 for driver product names.

* For the geared motor output torque, refer to the speed–torque characteristics.

*1 The value inside the ( ) represents the value when connecting an electromagnetic brake motor.

*2 This is the value of the internal inertia of the gear converted to the motor shaft. ( ) contain values for the flange output type.

*3 For SSCNETⅢ/H compatible drivers, the resolution is fixed at 10,000 P/R.

*4 Specifications for the flange output type.

Speed – Torque Characteristics (Reference values)

AZM46 Gear Ratio **5**

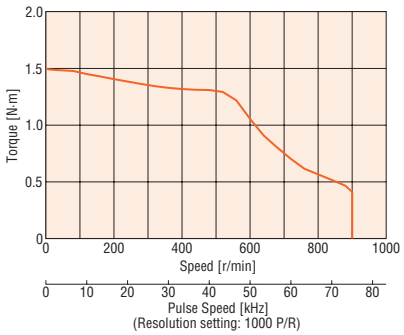

AZM66 Gear Ratio **5**

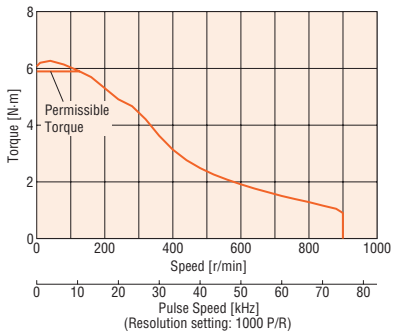

AZM98 Gear Ratio **5**

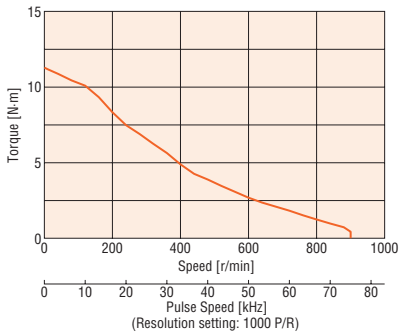

AZM46 Gear Ratio **9**

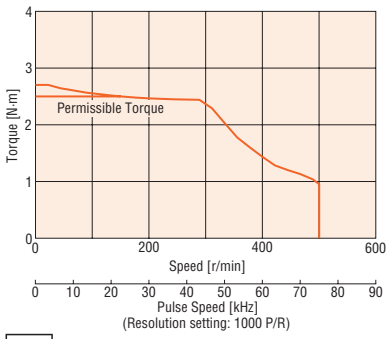

AZM66 Gear Ratio **15**

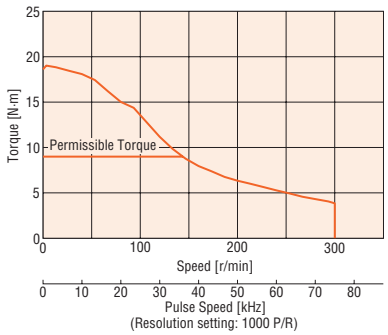

AZM98 Gear Ratio **15**

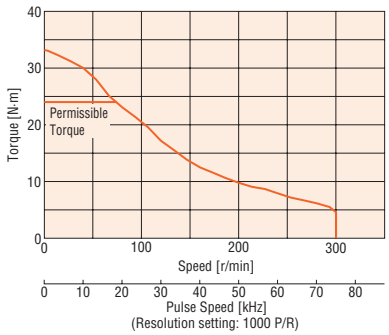

Note

● Data for the speed – torque characteristics is based on Oriental Motor's internal measurement conditions. If the conditions are changed, the characteristics may also change as a result.

● Depending on the driving conditions, a considerable amount of heat may be generated by the motor. To protect the absolute sensor, be sure to keep the temperature of the motor case at 80°C or less. (When conforming to the UL or CSA Standards, the temperature of the motor case must be kept at 75°C or less since the motor is recognized as heat-resistant class A.)

● For SSCNETⅢ/H compatible drivers, the resolution is fixed at 10,000 P/R.

Harmonic Geared Type Frame Size 42 mm, 60 mm, 90 mm

Specifications

Motor Product Name	Single Shaft	AZM46AC-HS50	AZM46AC-HS100	AZM66AC-HS50	AZM66AC-HS100	AZM98AC-HS50	AZM98AC-HS100
	With Electromagnetic Brake	AZM46MC-HS50	AZM46MC-HS100	AZM66MC-HS50	AZM66MC-HS100	AZM98MC-HS50	AZM98MC-HS100
Driver Product Name		AZD-A■, AZD-C■					
Max. Holding Torque	N·m	3.5	5	7	10	33	52
Rotor Inertia	J: kg·m^2	72×10^{-7} (88×10^{-7})*1		405×10^{-7} (565×10^{-7})*1		1290×10^{-7} (1450×10^{-7})*1	
Gear Ratio		50	100	50	100	50	100
Resolution	Resolution setting: 1000 P/R *2	0.0072°/Pulse	0.0036°/Pulse	0.0072°/Pulse	0.0036°/Pulse	0.0072°/Pulse	0.0036°/Pulse
Permissible Torque	N·m	3.5	5	7	10	33	52
Max. Instantaneous Torque*	N·m	8.3	11	23	36	*	107
Holding Torque at Motor Standstill	Power ON N·m	3.5	5	7	10	33	52
	Electromagnetic Brake N·m	3.5	5	7	10	33	52
Permissible Speed Range	r/min	0~70	0~35	0~70	0~35	0~70	0~35
Lost Motion (Load torque)	arcmin	1.5 max. (±0.16 N·m)	1.5 max. (±0.20 N·m)	0.7 max. (±0.28 N·m)	0.7 max. (±0.39 N·m)	0.7 max. (±1.2 N·m)	
Power Supply Input		Check "■Driver Specifications" on page 34 for the driver current when combined with a motor.					
Control Power Supply							

● A letter indicating the driver type is specified where the box ■ is located in the product name. Check "■List of Combinations" on page 21 for driver product names.

* For the geared motor output torque, refer to the speed–torque characteristics.

*1 The value inside the ( ) represents the value when connecting an electromagnetic brake motor.

*2 For SSCNETⅢ/H compatible drivers, the resolution is fixed at 10,000 P/R.

Note

● The rotor inertia represents a sum of the inertia of the harmonic gear converted to motor shaft values.

Speed – Torque Characteristics (Reference values)

AZM46 Gear Ratio **50**

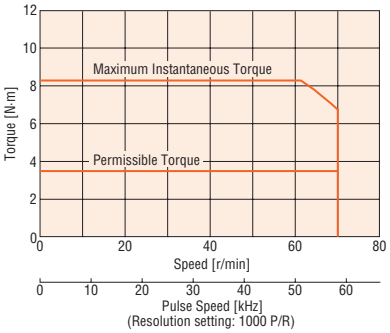

AZM66 Gear Ratio **50**

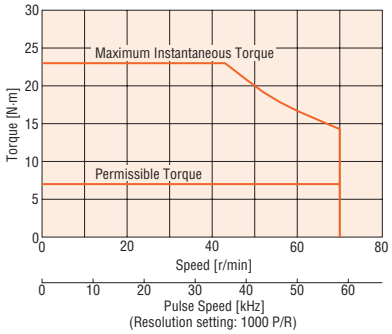

AZM98 Gear Ratio **50**

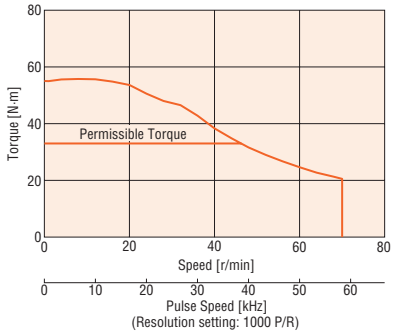

AZM46 Gear Ratio **100**

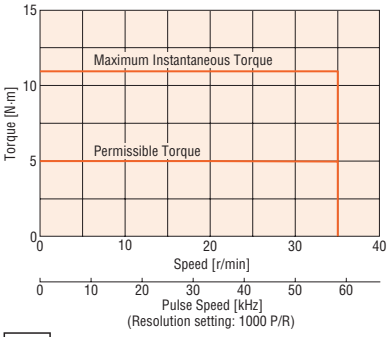

AZM66 Gear Ratio **100**

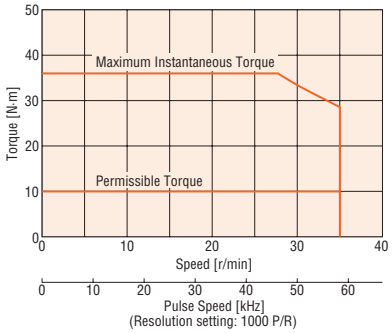

AZM98 Gear Ratio **100**

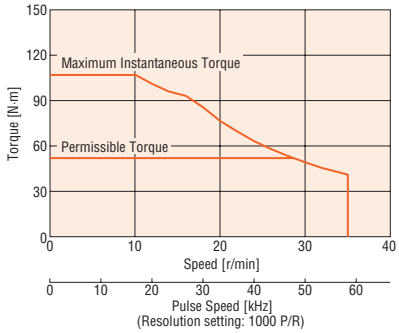

Note

● Data for the speed – torque characteristics is based on Oriental Motor's internal measurement conditions. If the conditions are changed, the characteristics may also change as a result.

● Depending on the driving conditions, a considerable amount of heat may be generated by the motor. To protect the absolute sensor, be sure to keep the temperature of the motor case at 80°C or less. (When conforming to the UL or CSA Standards, the temperature of the motor case must be kept at 75°C or less since the motor is recognized as heat-resistant class A.)

● For SSCNETⅢ/H compatible drivers, the resolution is fixed at 10,000 P/R.

Driver Specifications

Driver Product Name			AZD-AD	AZD-CD		AZD-AM3 AZD-AS3	AZD-CM3 AZD-CS3	
Main Power Supply	Input Voltage		Single-Phase 100-120 VAC −15～+6% 50/60 Hz	Single-Phase 200-240 VAC −15～+6% 50/60 Hz	Three-Phase 200-240 VAC −15～+6% 50/60 Hz	Single-Phase 100-120 VAC −15～+6% 50/60 Hz	Single-Phase 200-240 VAC −15～+6% 50/60 Hz	Three-Phase 200-240 VAC −15～+6% 50/60 Hz
	Input Current	**AZM46**	2.7 A	1.7 A	1.0 A	2.7 A	1.7 A	1.0 A
		AZM48	2.7 A	1.6 A	1.0 A	2.7 A	1.6 A	1.0 A
		AZM66	3.8 A	2.3 A	1.4 A	3.8 A	2.3 A	1.4 A
		AZM69	5.4 A	3.3 A	2.0 A	5.4 A	3.3 A	2.0 A
		AZM98	5.5 A	3.3 A	2.0 A	5.5 A	3.3 A	2.0 A
		AZM911	6.4 A	3.9 A	2.3 A	6.4 A	3.9 A	2.3 A
Control Power Supply	Input Voltage		24 VDC±5%*1					
	Input Current		0.25 A (0.5 A)*2					
Interface	Control Input		10 Points, Photocoupler			4 Points, Photocoupler		
	Pulse Output		2 Points, Line Driver			–		
	Control Output		6 Points, Photocoupler and Open-Collector			3 Points, Photocoupler and Open-Collector		
	Power Shut Down Signal Input		2 Points, Photocoupler					
	Power Shut Down Monitor Output		1 Point, Photocoupler and Open-Collector					

*1 If an electromagnetic brake motor is used, it will be 24 VDC±4% when the distance between the motor and driver is extended to 20 m with an Oriental Motor cable.
*2 The value inside the ( ) represents the value when connecting an electromagnetic brake motor. 0.33 A for **AZM46**.

Driver Product Name			AZD-AX AZD-A AZD-AEP AZD-AED AZD-APN	AZD-CX AZD-C AZD-CEP AZD-CED AZD-CPN	
Main Power Supply	Input Voltage		Single-Phase 100-120 VAC −15～+6% 50/60 Hz	Single-Phase 200-240 VAC −15～+6% 50/60 Hz	Three-Phase 200-240 VAC −15～+6% 50/60 Hz
	Input Current	**AZM46**	2.7 A	1.7 A	1.0 A
		AZM48	2.7 A	1.6 A	1.0 A
		AZM66	3.8 A	2.3 A	1.4 A
		AZM69	5.4 A	3.3 A	2.0 A
		AZM98	5.5 A	3.3 A	2.0 A
		AZM911	6.4 A	3.9 A	2.3 A
Control Power Supply	Input Voltage		24 VDC±5%*1		
	Input Current		0.25 A (0.5 A)*2		
Interface	Pulse Input		· 2 Points, Photocoupler · Maximum Input Pulse Frequency Line Driver: 1 MHz (50% duty) Open Collector: 250 kHz (50% duty)		
	Control Input		6 Points, Photocoupler		
	Pulse Output		2 Points, Line Driver		
	Control Output		6 Points, Photocoupler and Open-Collector		
	Power Shut Down Signal Input		2 Points, Photocoupler		
	Power Shut Down Monitor Output		1 Point, Photocoupler and Open-Collector		

*1 If an electromagnetic brake motor is used, it will be 24 VDC±4% when the distance between the motor and driver is extended to 20 m with an Oriental Motor cable.
*2 The value inside the ( ) represents the value when connecting an electromagnetic brake motor. 0.33 A for **AZM46**.

Driver Functions

Built-in Controller Type, Pulse Input Type with RS-485 Communication, Pulse Input Type, EtherNet/IP compatible, PROFINET compatible

Driver Product Name				AZD-□D	AZD-□X	AZD-□	AZD-□EP AZD-□PN
Number of Positioning Data Sets				256 Points	256 Points*1		256 Points
Remote I/O	Input			16 Points		–	16 Points
	Output			16 Points		–	16 Points
Setting Tool				Support Software **MEXE02**			
Coordinates Management Method				Battery-free Absolute System			
Operation	Positioning Operation	Product Line	Positioning Operation	○	○	○*1	○
			Positioning Push-Motion Operation*2	○	○	○*1	○
		Linking	Independent Operation	○	○	○*1	○
			Sequential Operation	○	○	○*1	○
			Multistep Speed-Change (Configuration Connection)	○	○	○*1	○
		Sequence Control	Loop Operation (Repeating)	○	○	○*1	○
			Event Jump Operation	○	○	○*1	○
	Speed Control Operation (Continuous operation)			○	○	○*1	○
	Return-To-Home Operation		Return-To-Home Operation	○	○	○	○
			High-Speed Return-to-Home Operation	○	○	○	○
	JOG Operation			○	○	○	○
Monitor/Information			Waveform Monitoring	○	○	○	○
			Overload Detection	○	○	○	○
			Overheat Detection (Motor/Driver)	○	○	○	○
			Position/Speed Information	○	○	○	○
			Temperature Detection (Motor/Driver)	○	○	○	○
			Motor Load Factor	○	○	○	○
			Distance Traveled/Integrating Distance Traveled	○	○	○	○
Alarm				○	○	○	○

● Either **A** (single-phase 100-120 VAC) or **C** (single-phase/three-phase 200-240 VAC) indicating the power supply input is specified where the box □ is located in the product name.
*1 This can be used via the support software **MEXE02**.
*2 Push-motion operation is not used in the **DGII** Series linear & rotary actuators or geared motors.

EtherCAT Drive Profile compatible

Driver Product Name		AZD-□ED
Remote I/O	Input	16 Points
	Output	16 Points
Operation Mode		Profile Position Mode (PP)
		Profile Speed Mode (PV)
		Return-to-Home Mode (HM)
		Cyclic Synchronous Position Mode (CSP)
		Cyclic Synchronous Speed Mode (CSV)
Setting Tool		Support Software **MEXE02**
Coordinates Management Method		Battery-Free Absolute System
Monitor/Information		Same as the table above.
Alarm		○

● Either **A** (single-phase 100-120 VAC) or **C** (single-phase/three-phase 200-240 VAC) indicating the power supply input is specified where the box □ is located in the product name.

MECHATROLINK-III compatible

Driver Product Name		AZD-□M3
Remote I/O	Input	8 Points
	Output	8 Points
Operation		INTERPOLATE Interpolation feed
		POSING Positioning
		FEED Constant speed feed
		EX_FEED External input positioning constant speed feed
		EX_POSING External input positioning
		ZRET Return-to-home
		VELCTRL Speed control*
		TRQCTRL Torque (thrust) control*
Setting Tool		Support Software **MEXE02**
Coordinates Management Method		Battery-Free Absolute System
Monitor/Information		Same as the table above.
Alarm		○

● Either **A** (single-phase 100-120 VAC) or **C** (single-phase/three-phase 200-240 VAC) indicating the power supply input is specified where the box □ is located in the product name.
* VELCTRL and TRQCTRL are not compatible with the standard stepper motor drive profile.

●SSCNETⅢ/H compatible

Driver Product Name		AZD-□S3
Remote I/O	Input	Blank
	Output	Blank
Operation		Position Control
		Speed Control*
		Torque Control*
		Torque Limiting*
Setting Tool		Support Software **MEXE02**
Coordinates Management Method		Battery-Free Absolute System
Monitor/Information		Same as the table above.
Alarm		○

● Either **A** (single-phase 100-120 VAC) or **C** (single-phase/three-phase 200-240 VAC) indicating the power supply input is specified where the box □ is located in the product name.
* Check with the host control device manufacturer for operation compatibility conditions.

■Communication Specifications

●RS-485 Communication

Protocol	Modbus RTU Mode
Electrical Characteristics	EIA-485 Based, Straight Cable Use twisted-pair cables (TIA/EIA-568B CAT5e or better recommended). The max. total extension length is 50 m. *
Communication Mode	Half Duplex and Start-Stop Synchronization (Data: 8 bits, stop bit: 1 bit or 2 bits, parity: none, even, or odd)
Baud Rate	9600 bps/19200 bps/38400 bps/57600 bps/115200 bps/230400 bps are available
Connection Type	Up to 31 units can be connected to a single programmable controller (master equipment).

*If noise generated by the motor cable or power supply cable causes a problem with the specific wiring or layout, shield the cable or use ferrite cores.

●EtherNet/IP

Communication Protocol		EtherNet/IP (Complies with CT16)
Vendor ID		187: Oriental Motor Company
Device Type		43: Generic Device
Baud Rate		10/100 Mbps (Autonegotiation)
Communication Mode		Full Duplex/Half Duplex (Autonegotiation)
Cable Specifications		Shielded Twisted-Pair (STP) Cable Stroke/Cross, Category 5e min.
Bytes	Output (Scanner→driver)	40 bytes
	Input (Driver→scanner)	56 bytes
Implicit Communication	Compatible Connections	2
	Connection Type	Exclusive Owner, Input Only
	Communication Cycle (RPI)	1～3200 ms
	Connection Type (Scanner→driver)	Point－to－Point
	Connection Type (Driver→scanner)	Point－to－Point, Multicast
	Data Reflection Trigger	Cyclic
IP Address Setting Method		IP Address Setting Switch, Parameter, DHCP
Compatible Topologies		Star, Linear, Ring (Device Level Ring)

●EtherCAT

Communication Protocol	IEC 61158 Type12
Physical Layer/Protocol	100 BASE-TX (IEEE 802.3)
Baud Rate	100 Mbps
Communication Cycle	・Free Run Mode: 1 ms min. ・SM2 Event Synchronous Mode: 1 ms min. ・DC Mode: 0.25 ms, 0.5 ms, 1 ms, 2 ms, 3 ms, 4 ms, 5 ms, 6 ms, 7 ms, 8 ms
Communication Port/ Connector	RJ45×2 (Shield-compatible) ECAT IN: EtherCAT Input ECAT OUT: EtherCAT Output
Topology	Daisy Chain (Max. 65,535 nodes)
Process Data	Variable PDO Mapping
Sync Manager	・SM0: Mailbox Output ・SM1: Mailbox Input ・SM2: Process Data Output ・SM3: Process Data Input
Mailbox (CoE)	・Emergency Messages ・SDO Requests ・SDO Responses ・SDO Information
Synchronous Mode	・Free Run Mode (Asynchronous) ・SM2 Event Synchronous Mode ・DC Mode (SYNC0 Event Synchronous)
Device Profile	IEC 61800-7 CiA402 Drive Profile

●PROFINET

Communication Protocol		PROFINET IO Ver.2.4
Vendor ID		0x33E: ORIENTAL MOTOR
Baud Rate		100 Mbps (Autonegotiation)
Communication Mode		Full Duplex (Autonegotiation)
Cable Specifications		Shielded Twisted-Pair (STP) Cable Stroke/Cross, Category 5e min. Recommended
Communication Connector		RJ45×2 (Shield-compatible)
Conformance Class		B
RT/IRT		RT
NetLoad Class		I
Supported Protocols		DCP, LLDP, SNMP, MRP*
Bytes	Output (Host System→driver)	40 byte
	Input (Driver→host system)	56 byte
Compatible Topologies		Star, Tree, Line, Ring*

*Specifications will vary according to the driver. Identify them using either the Module Software Version or the driver's date of manufacture.
The Module Software Version can be confirmed on either the **MEXE02** PROFINET monitor or the host system's setting tool.

- If the Module Software Version is 2.00 or later or the driver's date of manufacture is June 2022 or later Compatible with MRP and Ring.
- If the Module Software Version is 1.00 or earlier or the driver's date of manufacture is May 2022 or earlier
  The driver is certified as a 1-port PROFINET product. The output LLDP/SNMP information is the same regardless of which communication connector it is connected to.
  Not compatible with MRP or Ring.

●MECHATROLINK-Ⅲ

Communication Protocol		MECHATROLINK-Ⅲ
Baud Rate		100 Mbps
Transmission Period		0.5~4 ms (Compatible with 0.5 ms intervals)
Communication Period		0.5~32 ms (Compatible with 0.5 ms intervals)
Link Communication Words	Cyclic Communication	48 bytes/station or 32 bytes/station
	Event-Driven Communication	Fixed at 64 bytes
Station Address Setting		0.3 h~EFh
Extended Address		0 (Station address+0000 h)
Communication Connector		Industrial Mini I/O Connector
Communication Mode		Cyclic Communication Event-Driven Communication
Profile Type	Cyclic Communication	Standard Stepper Motor Drive Profile Standard Servo Profile
	Event-Driven Communication	Profile for ID Information Acquisition with Event-Driven Communication

●SSCNETⅢ/H compatible

Communication Protocol	SSCNETⅢ/H
Communication Medium	Optical Cable
Baud Rate	150 Mbps
Compatible Communication Period	0.44 ms, 0.88 ms
Compatible Calculation Period*	0.44 ms, 0.88 ms, 1.77 ms, 3.55 ms

*Depending on the servo system controller's specifications and connection axes.

General Specifications

		Motor	Driver: Built-in Controller Type Pulse Input Type with RS-485 Communication EtherNet/IP compatible EtherCAT Drive Profile compatible PROFINET compatible	Driver: Pulse Input Type MECHATROLINK-Ⅲ compatible SSCNETⅢ/H compatible
Thermal Class		130 (B) [UL/CSA is certified as compliant with 105 (A)]	–	
Insulation Resistance		100 MΩ or more when a 500 VDC megger is applied between the following places: ・Case–Motor Winding ・Case–Electromagnetic Brake Winding*1	100 MΩ or more when a 500 VDC megger is applied between the following places: ・Protective Earth Terminal–Main Power Supply Terminal ・Encoder Connector–Main Power Supply Terminal ・I/O Signal Terminal–Main Power Supply Terminal	
Dielectric Strength		Sufficient to withstand the following for 1 minute: ・Case–Motor Winding 1.5 kVAC 50 Hz or 60 Hz ・Case–Electromagnetic Brake Winding*1 1.5 kVAC 50 Hz or 60 Hz	Sufficient to withstand the following for 1 minute: ・Protective Earth Terminal–Main Power Supply Terminal 1.5 kVAC, 50 Hz or 60 Hz ・Encoder Connector–Main Power Supply Terminal 1.8 kVAC, 50 Hz or 60 Hz ・I/O Signal Terminal–Main Power Supply Terminal 1.8 kVAC, 50 Hz or 60 Hz	
Operating Environment (In operation)	Ambient Temperature	0～+40°C (Non-freezing)*2	0～+55°C (Non-freezing)*3	
	Ambient Humidity	85% or less (Non-condensing)		
	Atmosphere	No corrosive gases or dust. The product should not be exposed to water, oil or other liquids.		
Degree of Protection		IP66 (excluding installation surfaces and connectors)	IP10	IP20
Stop Position Accuracy		**AZM46**, **AZM48**: ±4 arc minutes (±0.067°)	**AZM66**, **AZM69**, **AZM98**, **AZM911**: ±3 arc minutes (±0.05°)	
Shaft Runout		0.05T.I.R. (mm)*4	–	
Concentricity of Installation Pilot to the Shaft		0.075T.I.R. (mm)*4	–	
Perpendicularity of Installation Surface to the Shaft		0.075T.I.R. (mm)*4	–	
Multiple Rotation Detection Range in Power OFF State		±900 Rotation (1800 rotations)		

*1 Only for products with an electromagnetic brake
*2 Based on Oriental Motor's internal measurement conditions
*3 When a heat sink of a capacity at least equivalent to an aluminum plate with a size of 200×200 mm and 2 mm thickness
*4 T. I. R. (Total Indicator Reading): The total dial gauge reading when the measurement section is rotated once around the reference axis center.

Note
● Separate the motor and driver when measuring insulation resistance or performing a dielectric voltage withstand test.
Also, do not perform these tests on the absolute sensor part of the motor.

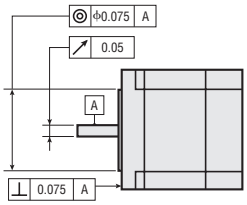

Electromagnetic Brake Specifications

Product Name	AZM46	AZM66	AZM69	AZM98
Type	Power Off Activated Type			
Power Supply Voltage	DC24V±5%*			
Power Supply Current A	0.08	0.25	0.25	0.25
Time Rating	Continuous			

* For the type with an electromagnetic brake, a 24 VDC±4% specification applies if the wiring distance between the motor and driver is extended to 20 m using a cable.

Rotation Direction

This indicates the rotation direction when viewed from the output shaft side of the motor.
The rotation direction of the output gear shaft relative to the standard type motor output shaft varies depending on the gear type and gear ratio.
Please check the following table.

Type	Gear Ratio	Rotation Direction when Viewed from the Output Shaft Side of the Motor
TS Geared Type	**3.6**, **7.2**, **10**	Same Direction
	20, **30**	Opposite Direction
FC Geared Type **PS** Geared Type **HPG** Geared Type	Total Gear Ratio	Same Direction
Harmonic Geared Type	Total Gear Ratio	Opposite Direction

● Standard Type Motor

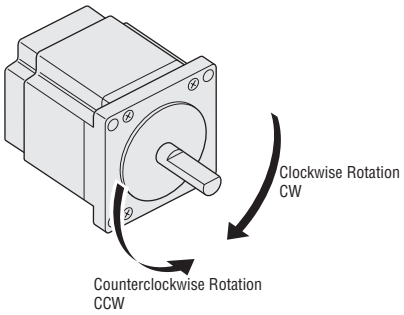

Permissible Radial Load and Permissible Axial Load

Unit: N

Type	Motor Frame Size	Product Name	Gear Ratio	Permissible Radial Load Distance from Shaft End mm 0	5	10	15	20	Permissible Axial Load
Standard Type	42 mm	**AZM46**	–	35	44	58	85	–	15
		AZM48		30	35	44	58	85	
	60 mm	**AZM66**, **AZM69**		90	100	130	180	270	30
	85 mm	**AZM98**, **AZM911**		260	290	340	390	480	60
TS Geared Type	42 mm	**AZM46**	**3.6**, **7.2**, **10**	20	30	40	50	–	15
			20, **30**	40	50	60	70	–	
	60 mm	**AZM66**	**3.6**, **7.2**, **10**	120	135	150	165	180	40
			20, **30**	170	185	200	215	230	
	90 mm	**AZM98**	**3.6**, **7.2**, **10**	300	325	350	375	400	150
			20, **30**	400	450	500	550	600	
FC Geared Type	42 mm	**AZM46**	**7.2**, **10**, **20**, **30**	180	200	220	250	–	100
	60 mm	**AZM66**		270	290	310	330	350	200
PS Geared Type	42 mm	**AZM46**	**5**	70	80	95	120	–	100
			7.2	80	90	110	140	–	
			10	85	100	120	150	–	
			25	120	140	170	210	–	
			36	130	160	190	240	–	
			50	150	170	210	260	–	
	60 mm	**AZM66**	**5**	170	200	230	270	320	200
			7.2	200	220	260	310	370	
			10	220	250	290	350	410	
			25	300	340	400	470	560	
			36	340	380	450	530	630	
			50	380	430	500	600	700	
	90 mm	**AZM98**	**5**	380	420	470	540	630	600
			7.2	430	470	530	610	710	
			10	480	530	590	680	790	
			25	650	720	810	920	1070	
			36	730	810	910	1040	1210	
			50	820	910	1020	1160	1350	
HPG Geared Type	40 mm	**AZM46**	**5**	150	170	190	230	270	430
			9	180	200	230	270	320	510
	60 mm	**AZM66**	**5**	250	270	300	330	360	700
			15	360	380	420	460	510	980
	90 mm	**AZM98**	**5**	600	630	670	710	750	1460
			15	830	880	930	980	1050	2030
Harmonic Geared Type	42 mm	**AZM46**	**50**, **100**	180	220	270	360	510	220
	60 mm	**AZM66**		320	370	440	550	720	450
	90 mm	**AZM98**		1090	1150	1230	1310	1410	1300

- The product names are listed such that the product names are distinguishable.
- The **PS** geared type and **HPG** geared type have a full lifespan of 20,000 hours when either the permissible radial load or the permissible axial load is applied.
  For the life of gearhead, please contact the nearest Oriental Motor sales office, or visit the Oriental Motor website.

Radial Load and Axial Load

Distance from Shaft End [mm]

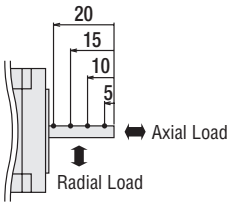

Permissible Moment Load

If an eccentric load is applied to the output flange-installation surface, load moment acts on the bearing.
Confirm before use that the axial load and load moment are within specification with the following formulas.

HPG Geared Type Flange Output Type

Product Name	Gear Ratio	Permissible Axial Load (N)	Permissible Moment Load (N·m)	Constant α(m)
AZM46	5	430	4.9	0.006
	9	510	5.9	
AZM66	5	700	12.0	0.011
	15	980	17.2	
AZM98	5	1460	38.7	0.0115
	15	2030	53.5	

m : Load mass (kg)
g : Gravitational acceleration (m/s^2)
F : External force (N)
L : Overhung distance (m)
α : Constant (m)
ΔF : Load applied to output flange face (N)
Fs : Permissible axial load (N)
ΔM : Load moment (N·m)
M : Permissible moment load (N·m)

The load moment can be calculated with the following formula.

Example 1: External force F (N) applied to the overhung position L (m) in a horizontal direction from the center of the output flange

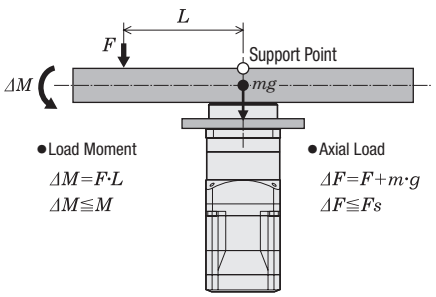

Example 2: External force F (N) applied to the overhung position L (m) in a vertical direction from the output flange-installation surface

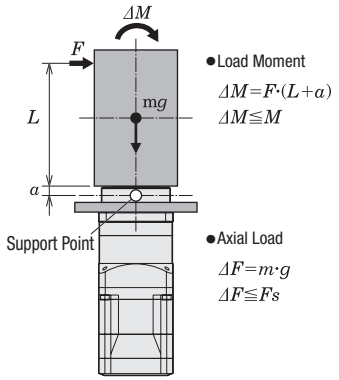

Harmonic Geared Type

Motor Frame Size	Permissible Axial Load (N)	Permissible Moment Load (N·m)	Constant α(m)
42 mm	220	5.6	0.009
60 mm	450	11.6	0.0114

The permissible moment load can be calculated with the following formula.

Example 1: External force F (N) applied to the overhung position L (m) in a horizontal direction from the center of the output flange

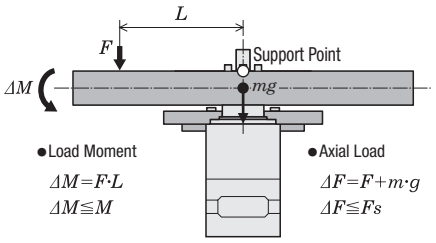

Example 2: External force F (N) applied to the overhung position L (m) in a vertical direction from the output flange-installation surface

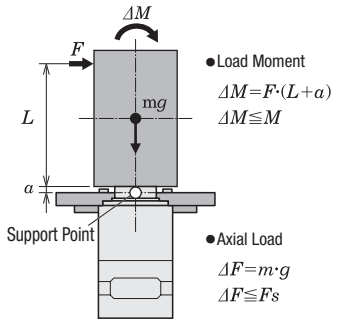

Harmonic Geared Type Accuracy

Principle and Structure

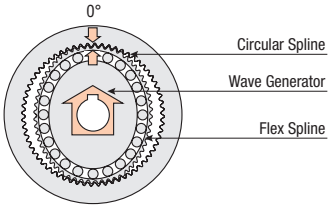

Accuracy

Unlike the conventional spur gear gearhead, the harmonic gear has no backlash. The harmonic gear has many teeth in simultaneous meshing engagement, and is designed to average out the effects of tooth pitch error and cumulative pitch error on rotation accuracy to ensure high positioning accuracy. Also, harmonic gears have high gear ratio, so that the torsion when the load torque is applied to the output shaft is much smaller than a single motor and other geared motor, and the rigidity is high. High rigidity is less subject to load fluctuation and enables stable positioning. When the high positioning accuracy and rigidity are required, refer to the following characteristics.

◇Angular Transmission Accuracy

Angular transmission error is the difference between the theoretical rotation angle of the output shaft, as calculated from the input pulse count, and actual rotation angle. Represented as the difference between the min. value and max. value in the set of measurements taken for a single rotation of the output shaft, starting from an arbitrary position.

Product Name	Angular Transmission Accuracy [arcmin]
AZM24-HS□	2 (0.034°)
AZM46-HS□	1.5 (0.025°)
AZM66-HS□	
AZM98-HS□	1 (0.017°)

● Values under no load conditions (gear reference values)

◇Torque – Torsion Characteristics

In actual applications, there is always frictional load, and displacement is produced as a result of this frictional load. If the frictional load is constant, the displacement will be constant for unidirectional operation. However, in bidirectional operation, double the displacement is produced over a round trip. This displacement can be estimated from the following torque – torsion characteristics.

This displacement occurs when an external force is applied as the gear is stopped, or when the gear is driven under a frictional load. The slope can be approximated with the spring constant in the following 3 classes, depending on the size of the load torque, and can be estimated through calculation.

1. Load torque T_L is T_1 max.

$$\theta = \frac{T_L}{K_1} \text{ [min]}$$

2. Load torque T_L exceeds T_1 but is less than T_2

$$\theta = \theta_1 + \frac{T_L - T_1}{K_2} \text{ [min]}$$

3. Load torque T_L exceeds T_2

$$\theta = \theta_2 + \frac{T_L - T_2}{K_3} \text{ [min]}$$

The torsion angle of the harmonic gear alone is calculated according to the size of the load torque.

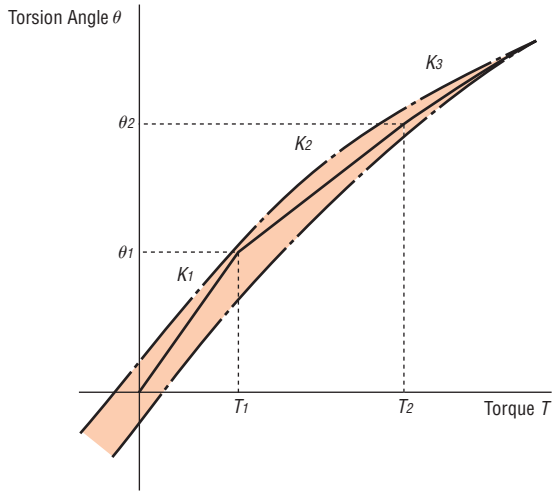

Torsion Angle – Torque Characteristics

Values for Determining Torsion Angle

Product Name	Gear Ratio	T1 N·m	K1 N·m/min	θ1 min	T2 N·m	K2 N·m/min	θ2 min	K3 N·m/min
AZM24-HS50	50	0.29	0.08	3.7	–	0.12	–	–
AZM24-HS100	100	0.29	0.1	2.9	1.5	0.15	11	0.21
AZM46-HS50	50	0.8	0.64	1.25	2	0.87	2.6	0.93
AZM46-HS100	100	0.8	0.79	1.02	2	0.99	2.2	1.28
AZM66-HS50	50	2	0.99	2	6.9	1.37	5.6	1.66
AZM66-HS100	100	2	1.37	1.46	6.9	1.77	4.2	2.1
AZM98-HS50	50	7	3.8	1.85	25	5.2	5.3	6.7
AZM98-HS100	100	7	4.7	1.5	25	7.3	4	8.4

Load Torque – Driver Input Current Characteristics

This is the relationship between load torque and driver input current at various speeds under actual operation conditions. Due to these characteristics, it is possible to estimate the power supply capacity required to use the multi-axis. For geared types, use the speed and torque at the motor shaft.

Motor shaft speed=Output gear shaft speed×Gear ratio [r/min]

$$\text{Motor Shaft Torque} = \frac{\text{Output gear shaft torque}}{\text{Gear Ratio}} \text{[N·m]}$$

Single-Phase 100-120 VAC

AZM46□C

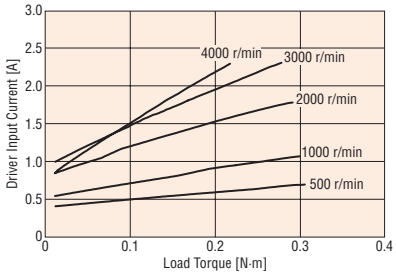

AZM48□C

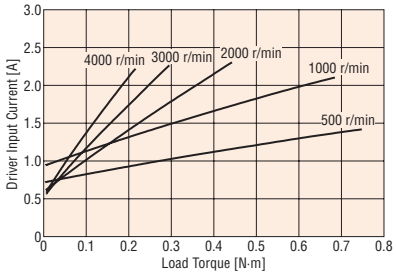

AZM66□C

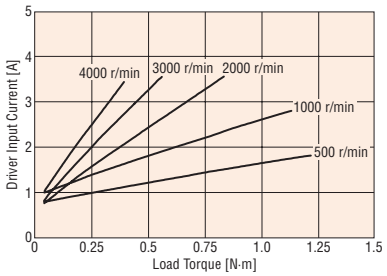

AZM69□C

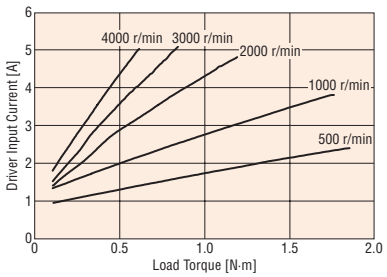

Single-Phase 200-240 VAC

AZM46□C

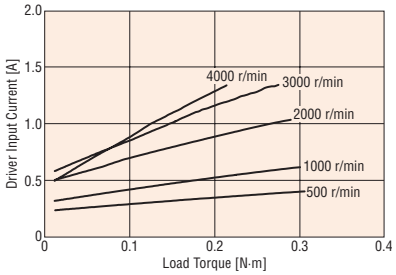

AZM48□C

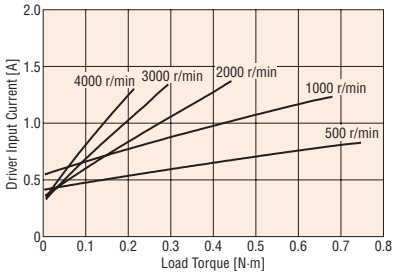

AZM66□C

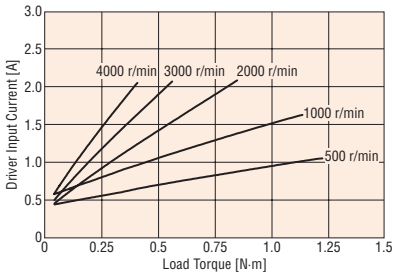

AZM69□C

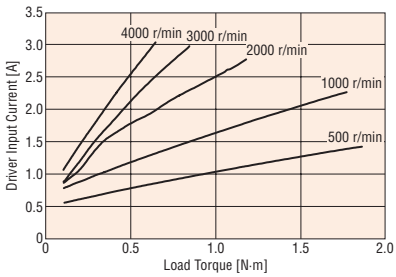

Three-Phase 200-240 VAC

AZM46□C

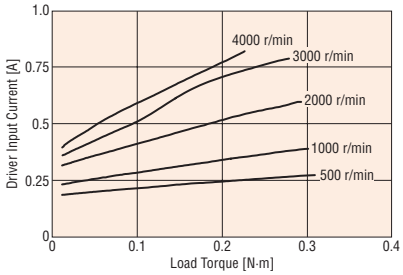

AZM48□C

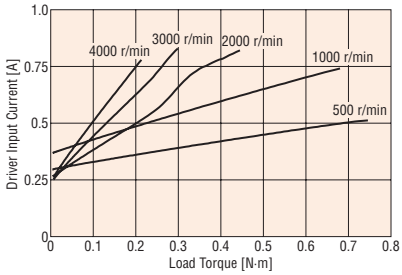

AZM66□C

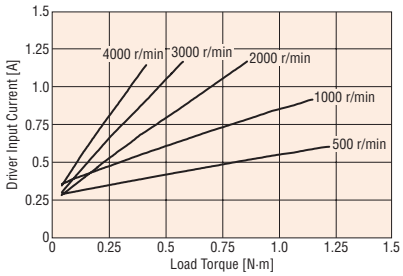

AZM69□C

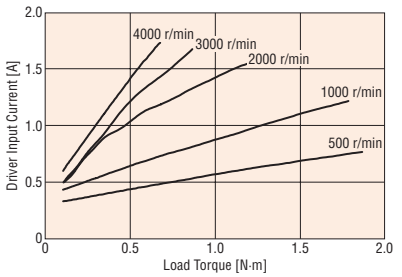

Single-Phase 100-120 VAC

AZM98□C

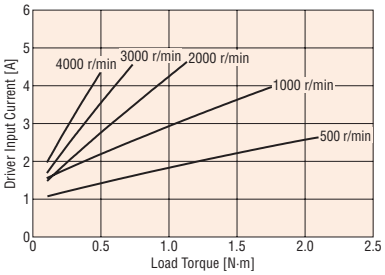

AZM911□C

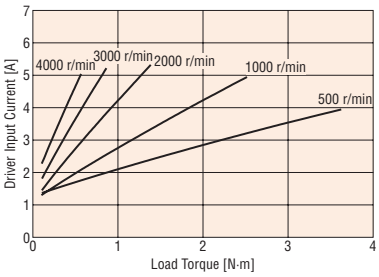

Single-Phase 200-240 VAC

AZM98□C

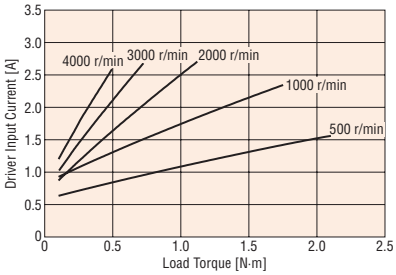

AZM911□C

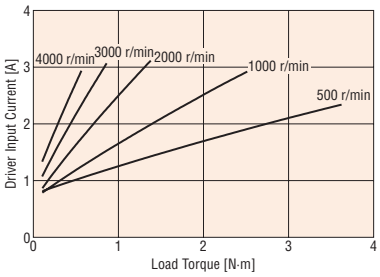

Three-Phase 200-240 VAC

AZM98□C

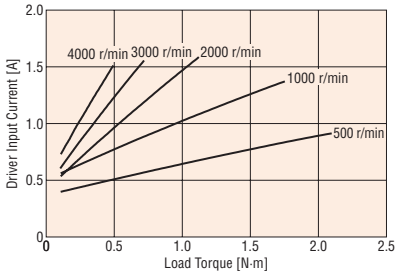

AZM911□C

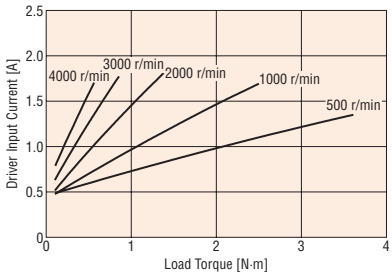

Dimensions (Unit = mm)

●Motor

◇Standard Type

Frame Size 42 mm

2D & 3D CAD

Motor Shaft Type	Product Name	Mass kg	2D CAD
Round Shaft with Flat	**AZM46AC**	0.44	B1092
Straight Type	**AZM46A0C**		B1288

Round Shaft with Flat

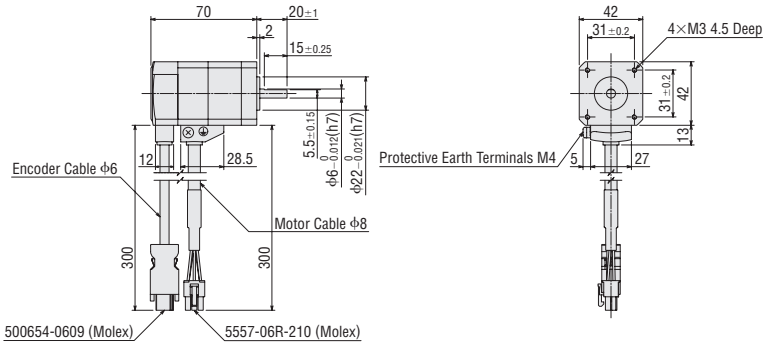

Straight Type

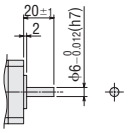

Frame Size 42 mm

2D & 3D CAD

Motor Shaft Type	Product Name	Mass kg	2D CAD
Round Shaft with Flat	**AZM48AC**	0.68	B1312
Straight Type	**AZM48A0C**		B1289
With Key	**AZM48A1C**		B1299

Round Shaft with Flat

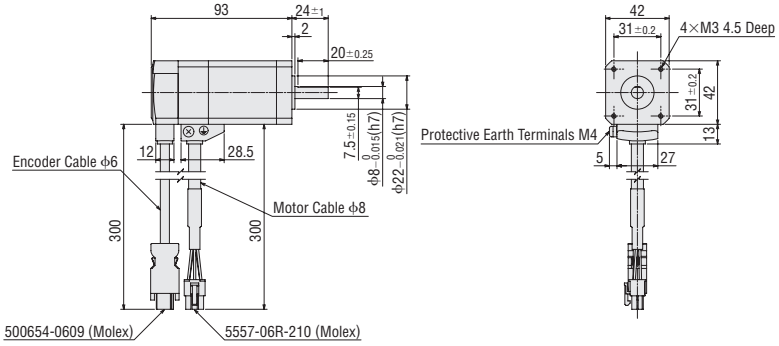

Straight Type

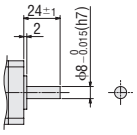

With Key

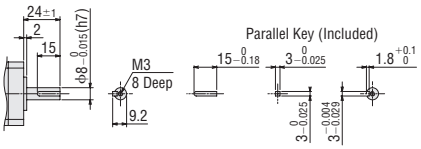

Frame Size 60 mm

2D & 3D CAD

Motor Shaft Type	Product Name	L	Mass kg	2D CAD
Round Shaft with Flat	**AZM66AC**	72	0.91	B1093
Straight Type	**AZM66A0C**			B1290
With Key	**AZM66A1C**			B1300
Round Shaft with Flat	**AZM69AC**	97.5	1.4	B1129
Straight Type	**AZM69A0C**			B1291
With Key	**AZM69A1C**			B1301

Round Shaft with Flat

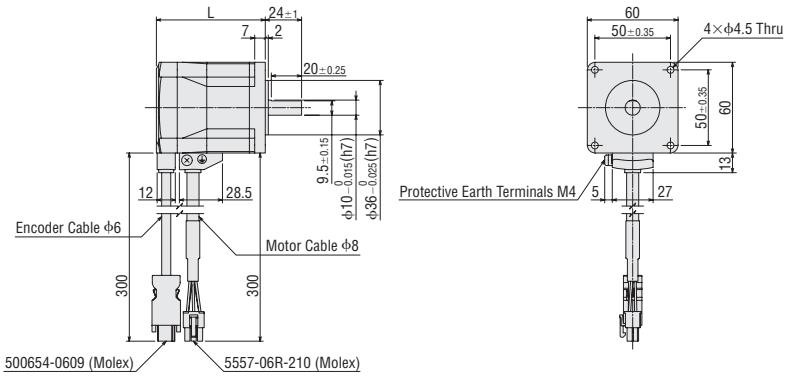

Straight Type

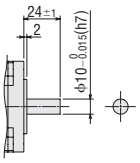

With Key

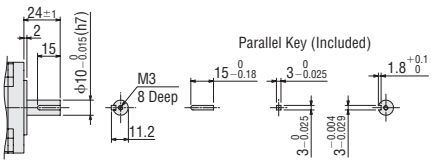

Frame Size 85 mm

2D & 3D CAD

Motor Shaft Type	Product Name	L	Mass kg	2D CAD
Round Shaft with Flat	**AZM98AC**	84	1.9	B1181
Straight Type	**AZM98A0C**			B1292
With Key	**AZM98A1C**			B1302
Round Shaft with Flat	**AZM911AC**	114	3	B1183
Straight Type	**AZM911A0C**			B1293
With Key	**AZM911A1C**			B1303

Round Shaft with Flat

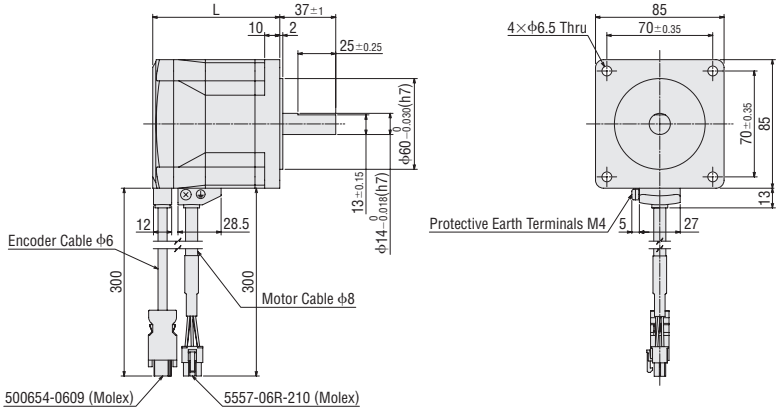

Straight Type

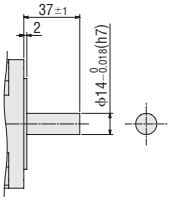

With Key

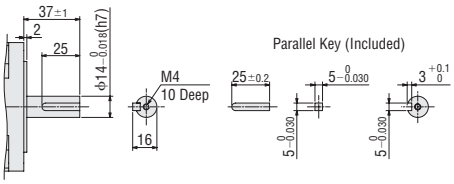

◇Standard Type with an Electromagnetic Brake

Frame Size 42 mm

2D & 3D CAD

Motor Shaft Type	Product Name	Mass kg	2D CAD
Round Shaft with Flat	**AZM46MC**	0.61	B1154
Straight Type	**AZM46M0C**		B1294

Round Shaft with Flat

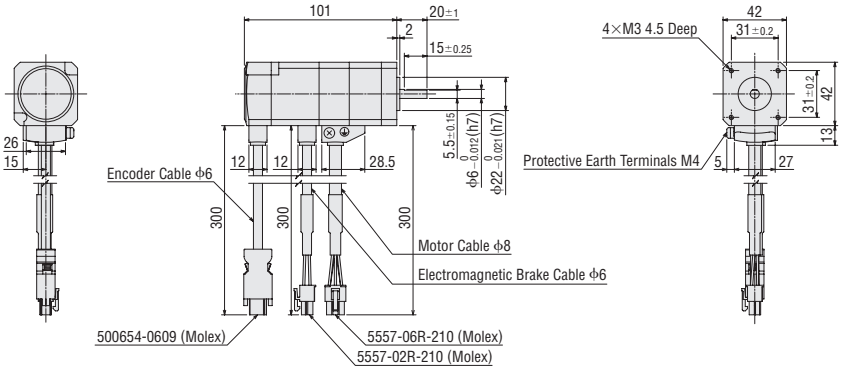

Straight Type

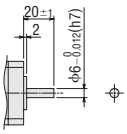

Frame Size 60 mm

2D & 3D CAD

Motor Shaft Type	Product Name	L	Mass kg	2D CAD
Round Shaft with Flat	**AZM66MC**	118	1.3	B1155
Straight Type	**AZM66M0C**			B1295
With Key	**AZM66M1C**			B1305
Round Shaft with Flat	**AZM69MC**	143.5	1.8	B1156
Straight Type	**AZM69M0C**			B1296
With Key	**AZM69M1C**			B1306

Round Shaft with Flat

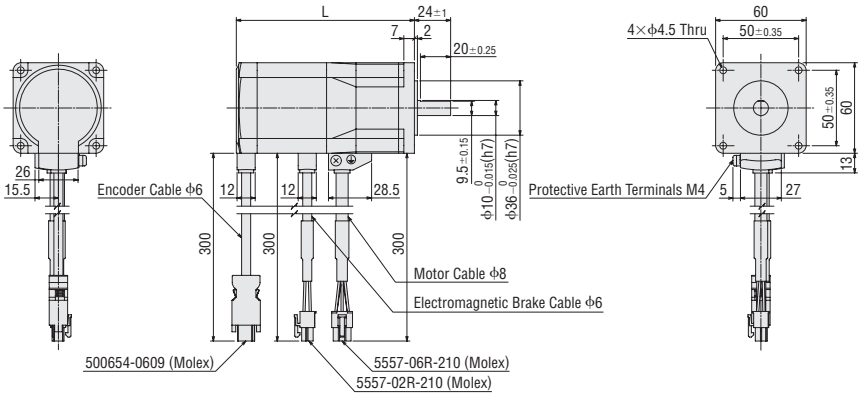

Straight Type

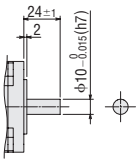

With Key

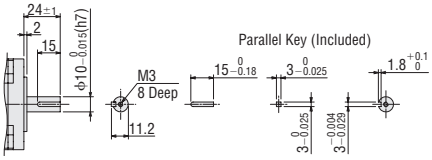

Frame Size 85 mm

2D & 3D CAD

Motor Shaft Type	Product Name	Mass kg	2D CAD
Round Shaft with Flat	**AZM98MC**	2.5	B1182
Straight Type	**AZM98M0C**		B1297
With Key	**AZM98M1C**		B1307

Round Shaft with Flat

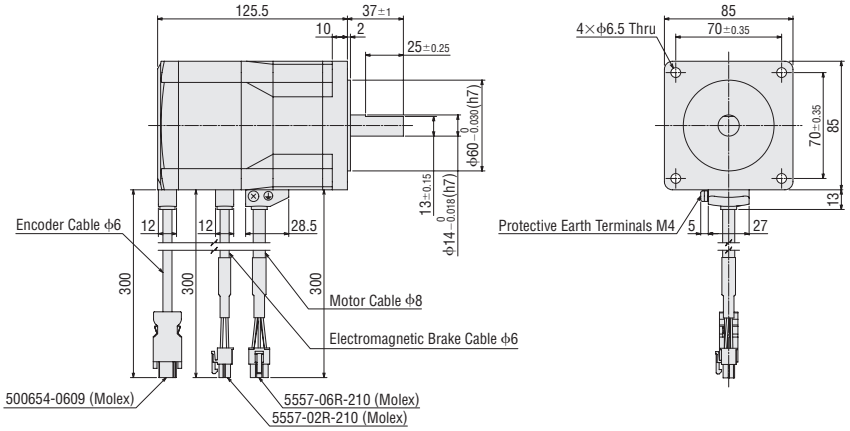

Straight Type

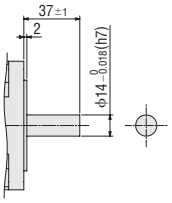

With Key

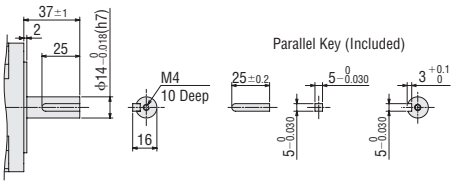

◇**TS** Geared Type

Frame Size 42 mm

2D & 3D CAD

Cable Outlet Direction	Product Name	Gear Ratio	Mass kg	2D CAD
Down	**AZM46AC-TS■**	**3.6**, **7.2**, **10**, **20**, **30**	0.59	B1157
Right	**AZM46AC-TS■R**			B1272
Up	**AZM46AC-TS■U**			B1270
Left	**AZM46AC-TS■L**			B1271

● Cable Outlet Direction

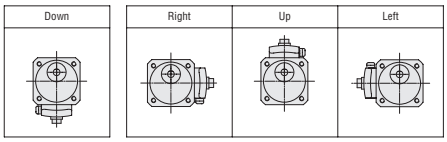

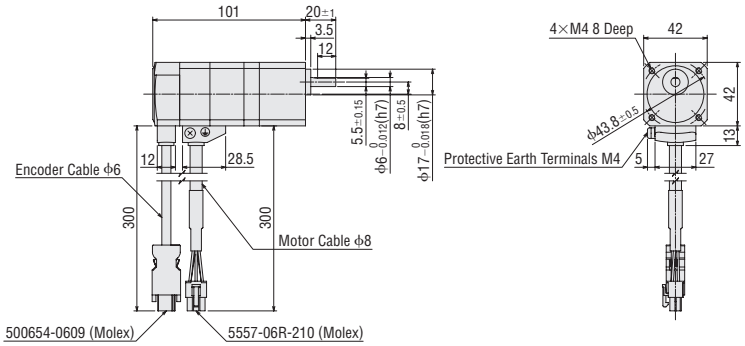

Frame Size 60 mm

2D & 3D CAD

Cable Outlet Direction	Product Name	Gear Ratio	Mass kg	2D CAD
Down	**AZM66AC-TS■**	**3.6**, **7.2**, **10**, **20**, **30**	1.3	B1158
Right	**AZM66AC-TS■R**			B1275
Up	**AZM66AC-TS■U**			B1273
Left	**AZM66AC-TS■L**			B1274

● Cable Outlet Direction

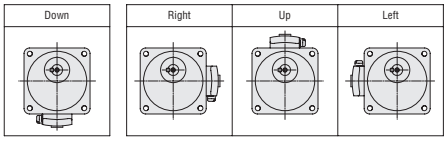

● Installation Screws: M4×60 P0.7 (4 screws included)

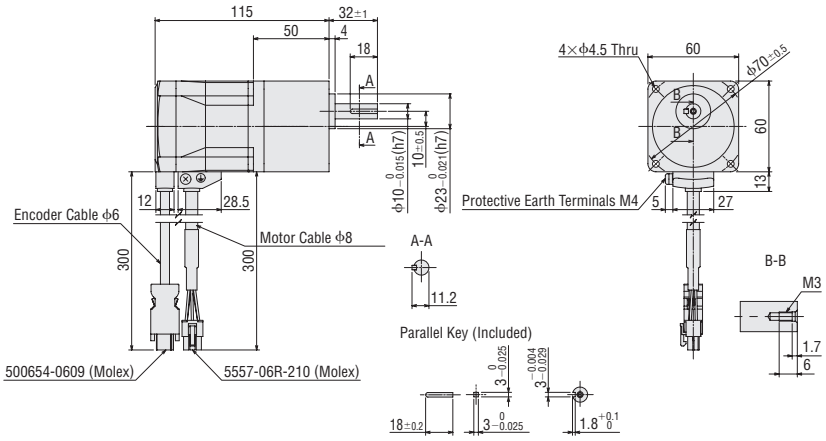

● A number indicating the gear ratio is specified where the box ■ is located in the product name.

Frame Size 90 mm

2D & 3D CAD

Cable Outlet Direction	Product Name	Gear Ratio	Mass kg	2D CAD
Down	**AZM98AC-TS■**	**3.6, 7.2, 10, 20, 30**	3.1	B1184
Right	**AZM98AC-TS■R**			B1278
Up	**AZM98AC-TS■U**			B1276
Left	**AZM98AC-TS■L**			B1277

● Cable Outlet Direction

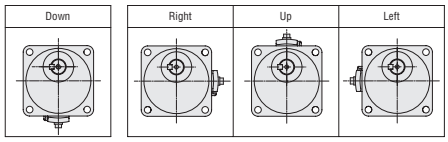

● Installation Screws: M8×90 P1.25 (4 screws included)

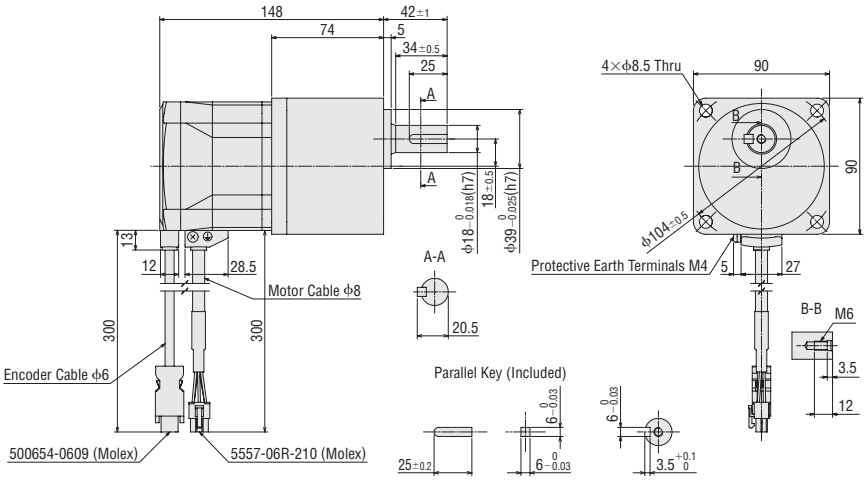

◇TS Geared Type with Electromagnetic Brake

Frame Size 42 mm

2D & 3D CAD

Cable Outlet Direction	Product Name	Gear Ratio	Mass kg	2D CAD
Down	**AZM46MC-TS■**	**3.6, 7.2, 10, 20, 30**	0.76	B1216
Right	**AZM46MC-TS■R**			B1284
Up	**AZM46MC-TS■U**			B1282
Left	**AZM46MC-TS■L**			B1283

● Cable Outlet Direction

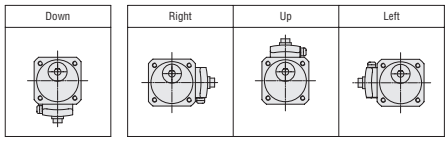

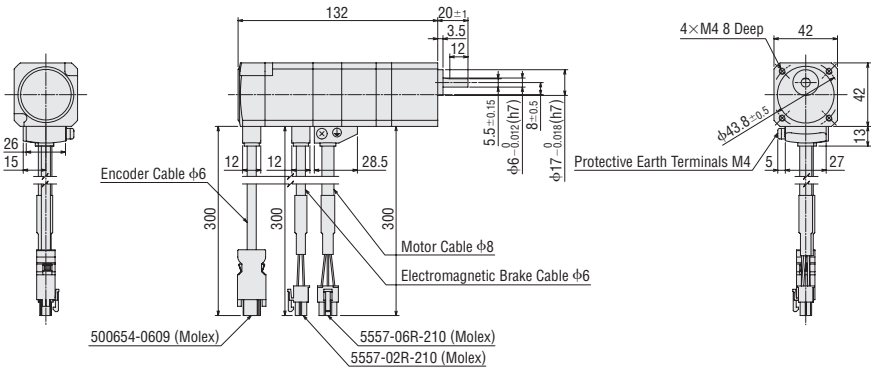

Frame Size 60 mm

2D & 3D CAD

Cable Outlet Direction	Product Name	Gear Ratio	Mass kg	2D CAD
Down	**AZM66MC-TS■**	**3.6, 7.2, 10, 20, 30**	1.7	B1217
Right	**AZM66MC-TS■R**			B1287
Up	**AZM66MC-TS■U**			B1285
Left	**AZM66MC-TS■L**			B1286

● Cable Outlet Direction

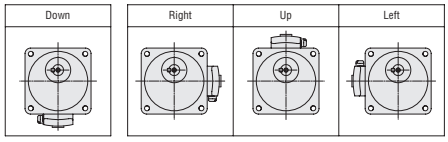

● Installation Screws: M4×60 P0.7 (4 screws included)

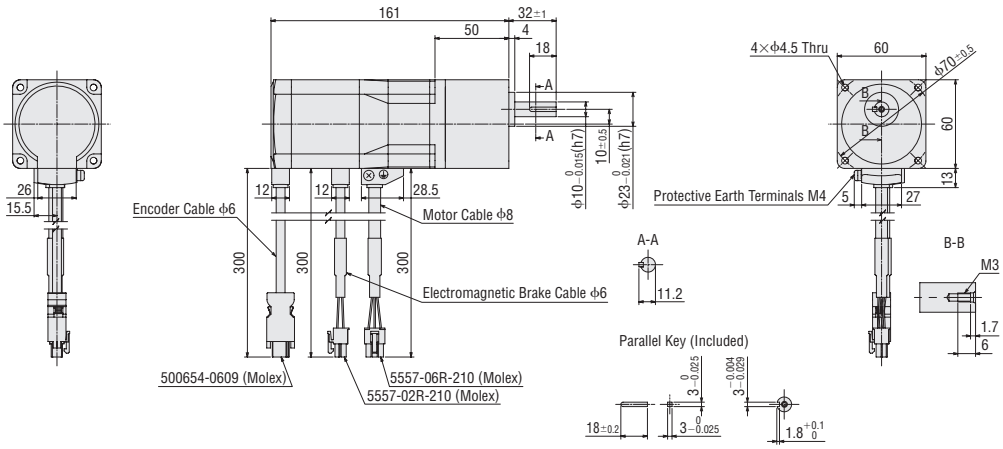

● A number indicating the gear ratio is specified where the box ■ is located in the product name.

Frame Size 90 mm

2D & 3D CAD

Cable Outlet Direction	Product Name	Gear Ratio	Mass kg	2D CAD
Down	**AZM98MC-TS■**	**3.6**, **7.2**, **10**, **20**, **30**	3.7	B1190
Right	**AZM98MC-TS■R**			B1281
Up	**AZM98MC-TS■U**			B1279
Left	**AZM98MC-TS■L**			B1280

● Cable Outlet Direction

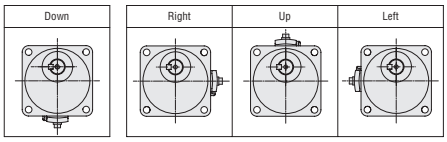

● Installation Screws: M8×90 P1.25 (4 screws included)

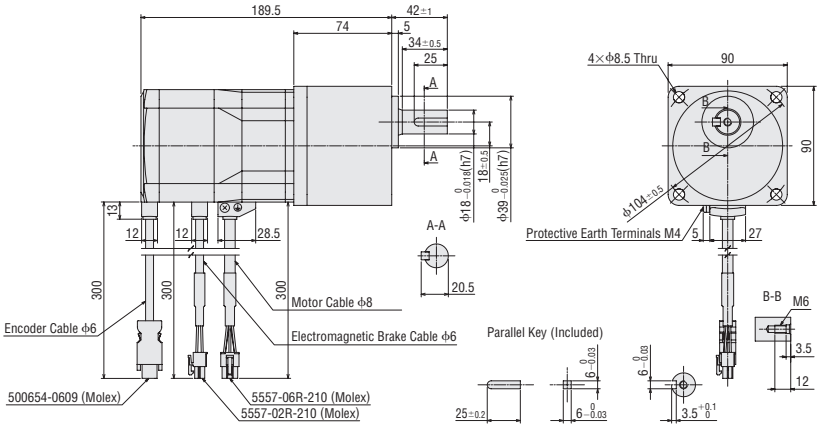

◇**FC** Geared Type

Frame Size 42 mm Cable Outlet Direction Up

2D & 3D CAD

Product Name	Gear Ratio	Mass kg	2D CAD
AZM46AC-FC■UA	**7.2**, **10**, **20**, **30**	0.79	B1314

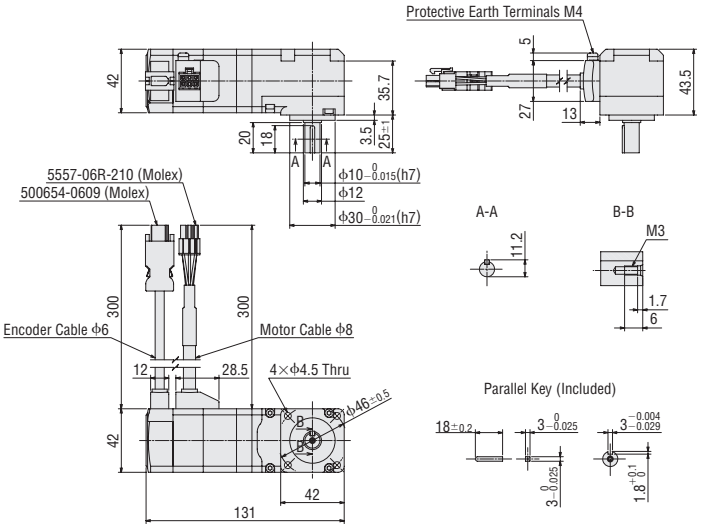

Frame Size 42 mm Cable Outlet Direction Down

2D & 3D CAD

Product Name	Gear Ratio	Mass kg	2D CAD
AZM46AC-FC■DA	**7.2**, **10**, **20**, **30**	0.79	B1313

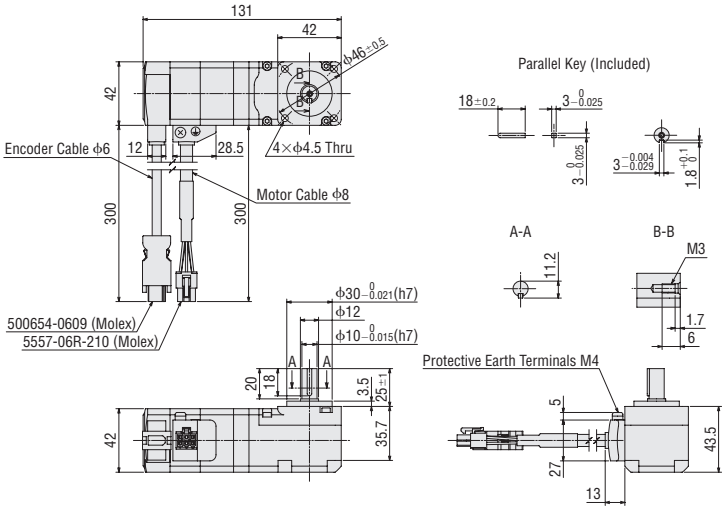

● A number indicating the gear ratio is specified where the box ■ is located in the product name.

Frame Size 60 mm Cable Outlet Direction Up 2D & 3D CAD

Product Name	Gear Ratio	Mass kg	2D CAD
AZM66AC-FC■UA	**7.2, 10, 20, 30**	1.8	B1318

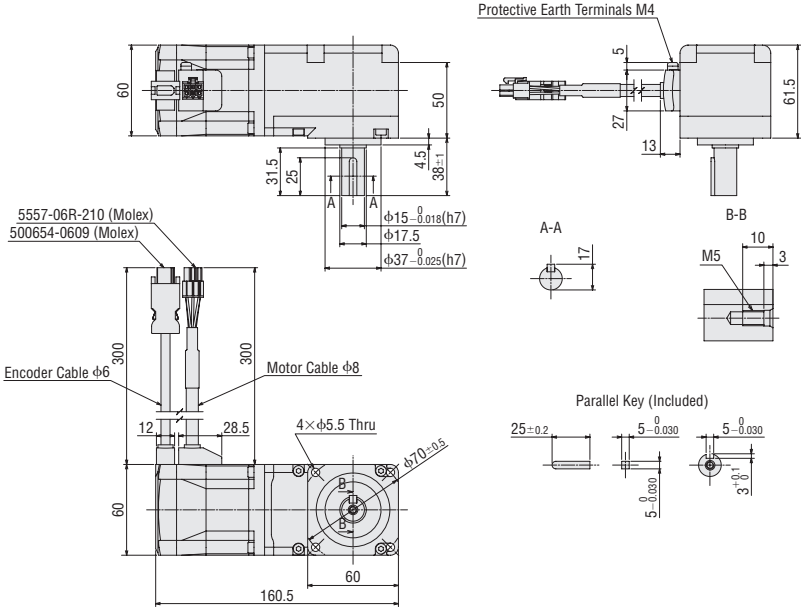

Frame Size 60 mm Cable Outlet Direction Down 2D & 3D CAD

Product Name	Gear Ratio	Mass kg	2D CAD
AZM66AC-FC■DA	**7.2, 10, 20, 30**	1.8	B1317

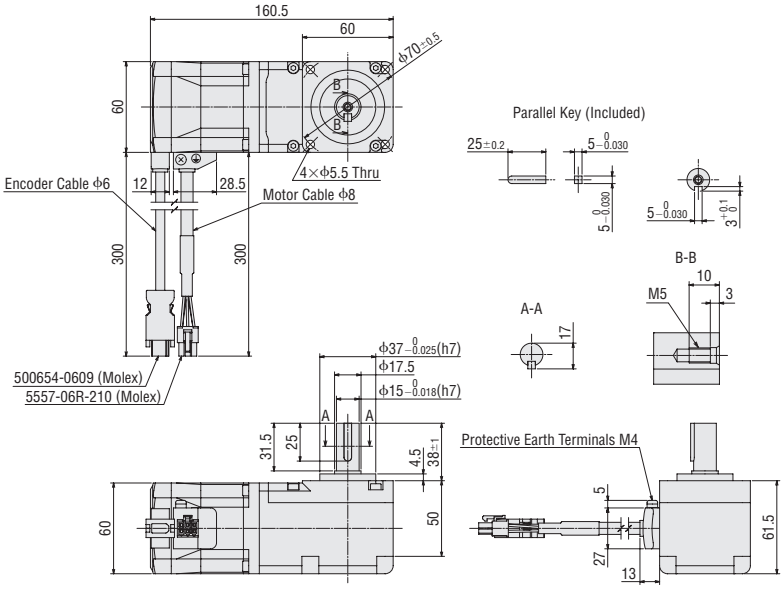

● A number indicating the gear ratio is specified where the box ■ is located in the product name.

◇**FC** Geared Type with Electromagnetic Brake

Frame Size 42 mm Cable Outlet Direction Up 2D & 3D CAD

Product Name	Gear Ratio	Mass kg	2D CAD
AZM46MC-FC■UA	**7.2**, **10**, **20**, **30**	0.96	B1316

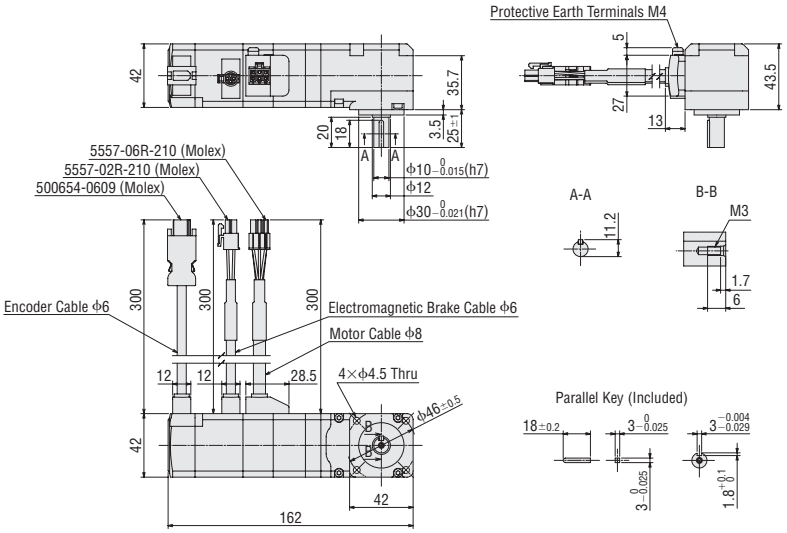

Frame Size 42 mm Cable Outlet Direction Down 2D & 3D CAD

Product Name	Gear Ratio	Mass kg	2D CAD
AZM46MC-FC■DA	**7.2**, **10**, **20**, **30**	0.96	B1315

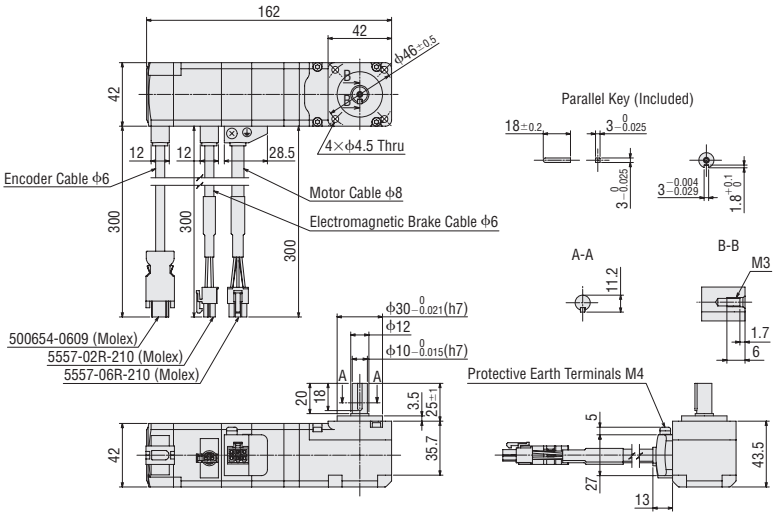

● A number indicating the gear ratio is specified where the box ■ is located in the product name.

Frame Size 60 mm Cable Outlet Direction Up 2D & 3D CAD

Product Name	Gear Ratio	Mass kg	2D CAD
AZM66MC-FC■UA	**7.2, 10, 20, 30**	2.2	B1320

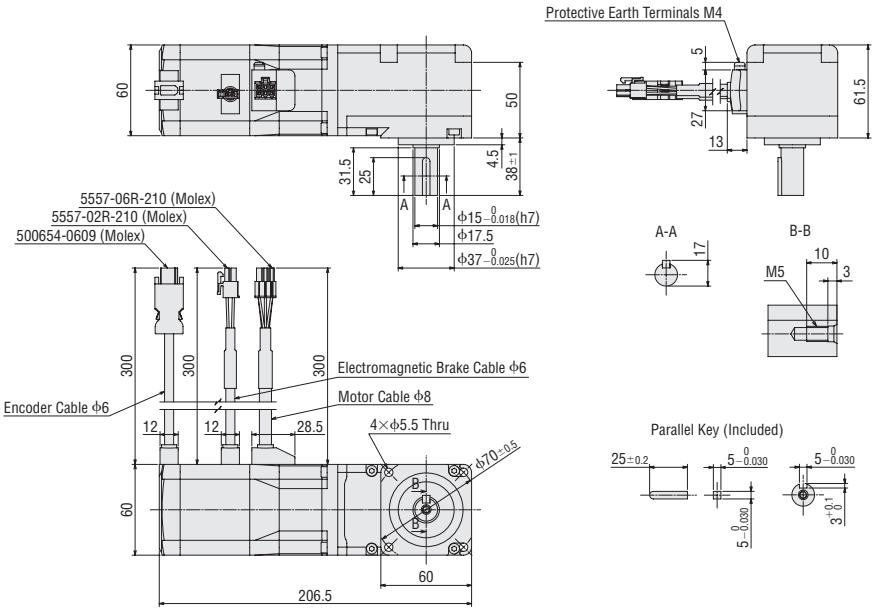

Frame Size 60 mm Cable Outlet Direction Down 2D & 3D CAD

Product Name	Gear Ratio	Mass kg	2D CAD
AZM66MC-FC■DA	**7.2, 10, 20, 30**	2.2	B1319

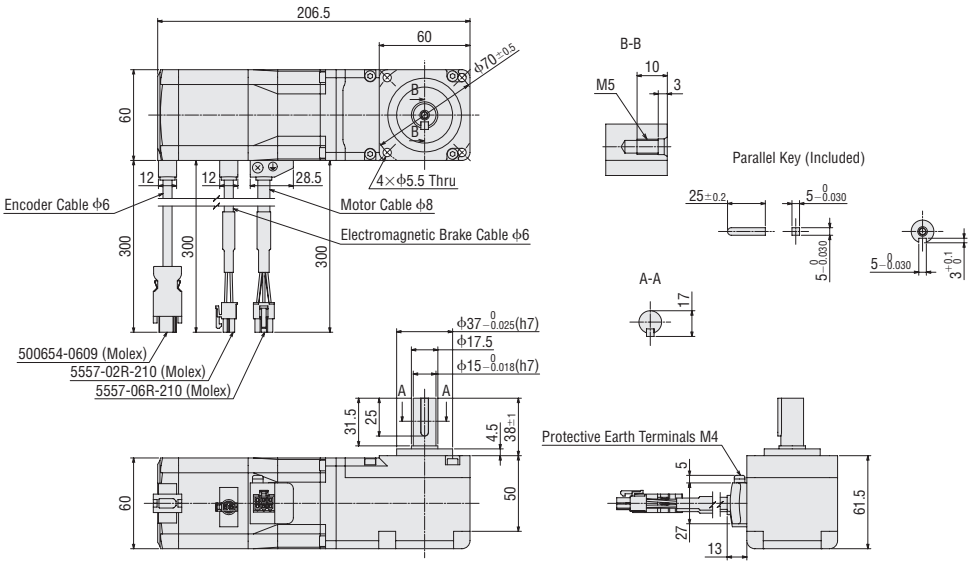

● A number indicating the gear ratio is specified where the box ■ is located in the product name.

◇**PS** Geared Type

Frame Size 42 mm

2D & 3D CAD

Product Name	Gear Ratio	L	Mass kg	2D CAD
AZM46AC-PS■	**5**, **7.2**, **10**	98	0.64	B1159
	25, **36**, **50**	121.5	0.79	B1160

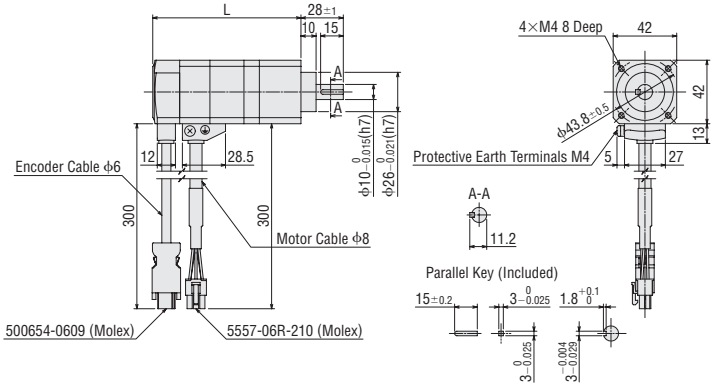

Frame Size 60 mm

2D & 3D CAD

Product Name	Gear Ratio	L	Mass kg	2D CAD
AZM66AC-PS■	**5**, **7.2**, **10**	104	1.3	B1161
	25, **36**, **50**	124	1.6	B1162

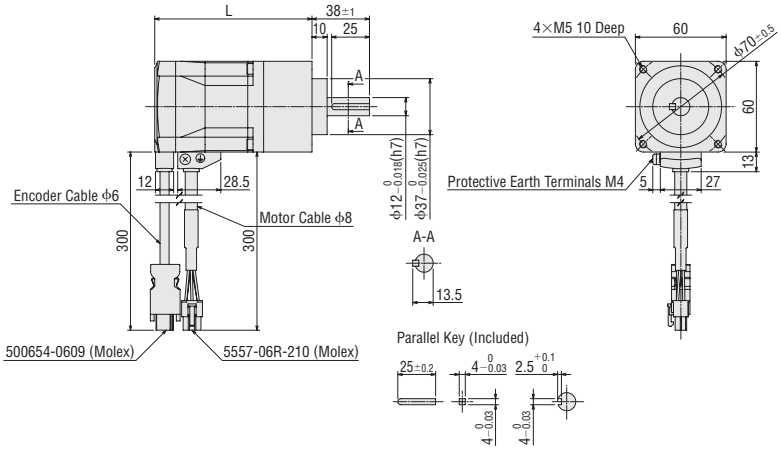

Frame Size 90 mm

2D & 3D CAD

Product Name	Gear Ratio	L	Mass kg	2D CAD
AZM98AC-PS■	**5**, **7.2**, **10**	131	3.3	B1185
	25, **36**, **50**	158.5	4.1	B1186

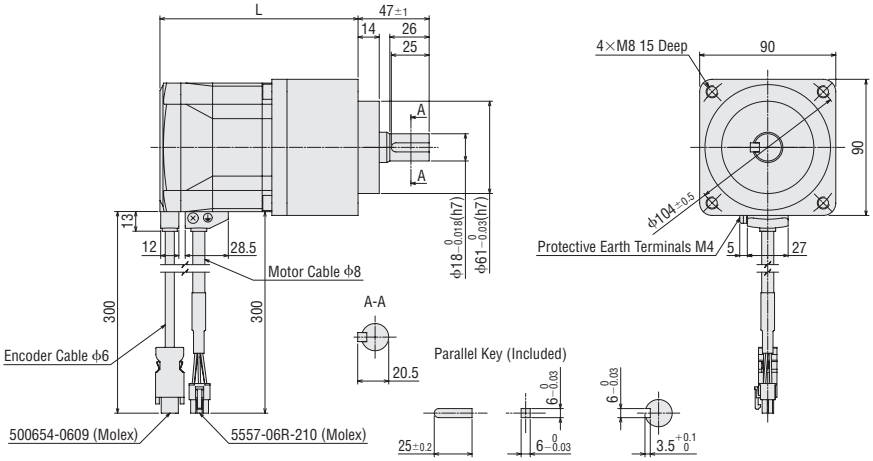

● A number indicating the gear ratio is specified where the box ■ is located in the product name.

◇**PS** Geared Type with Electromagnetic Brake

Frame Size 42 mm

2D & 3D CAD

Product Name	Gear Ratio	L	Mass kg	2D CAD
AZM46MC-PS■	**5**, **7.2**, **10**	129	0.81	B1218
	25, **36**, **50**	152	0.96	B1219

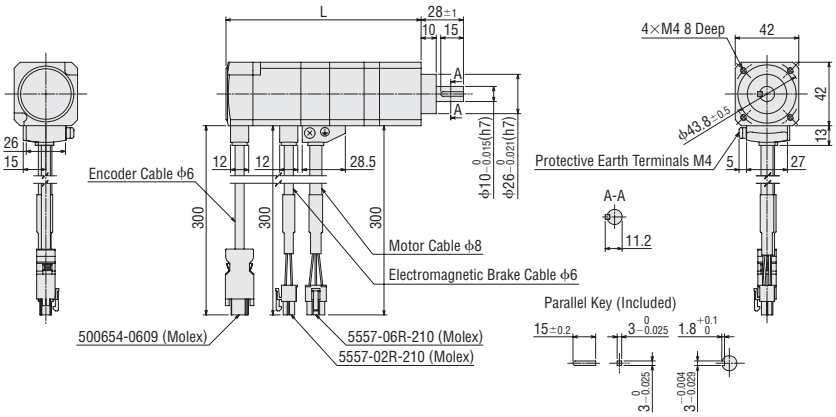

Frame Size 60 mm

2D & 3D CAD

Product Name	Gear Ratio	L	Mass kg	2D CAD
AZM66MC-PS■	**5**, **7.2**, **10**	150	1.7	B1220
	25, **36**, **50**	170	2.0	B1221

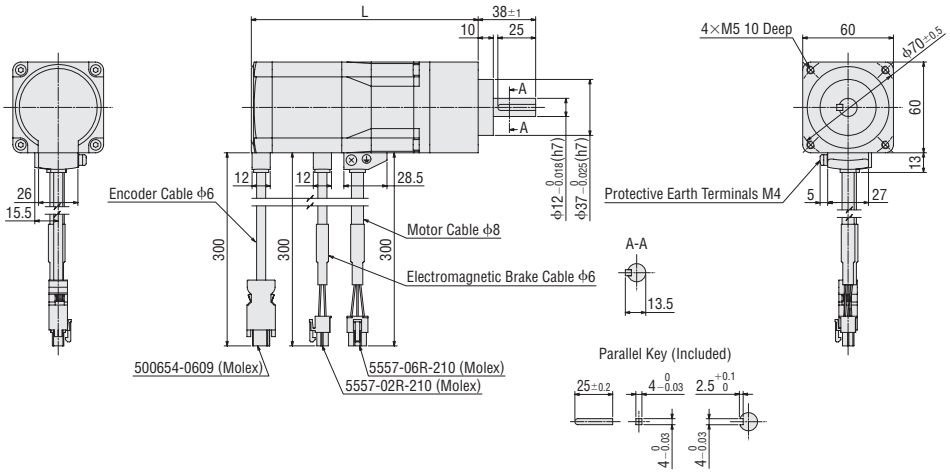

Frame Size 90 mm

2D & 3D CAD

Product Name	Gear Ratio	L	Mass kg	2D CAD
AZM98MC-PS■	**5**, **7.2**, **10**	172.5	3.9	B1191
	25, **36**, **50**	200	4.7	B1192

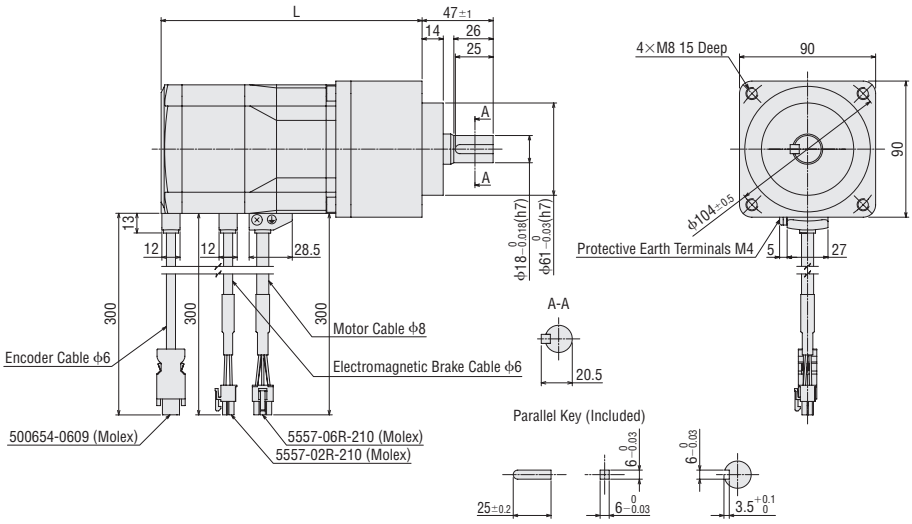

● A number indicating the gear ratio is specified where the box ■ is located in the product name.

◇**HPG** Geared Type Shaft Output Type

Frame Size 40 mm

2D & 3D CAD

Product Name	Gear Ratio	Mass kg	2D CAD
AZM46AC-HP■	**5**, **9**	0.71	B1163

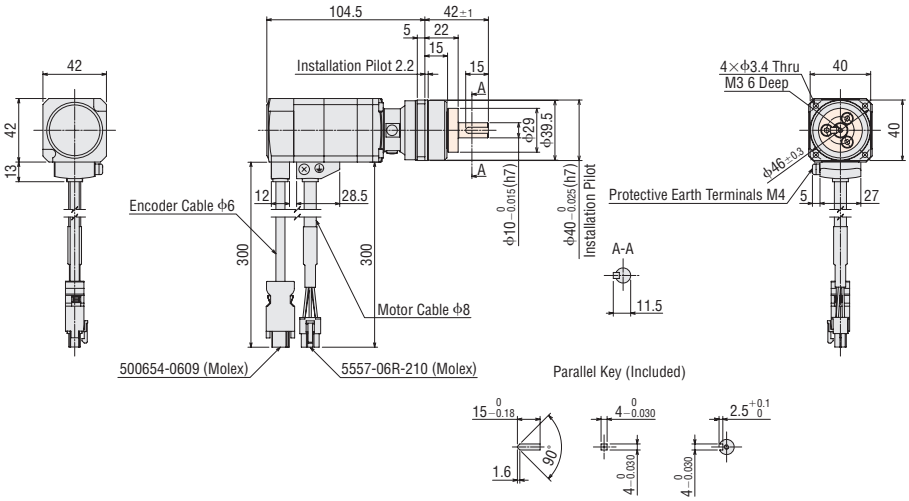

Frame Size 60 mm

2D & 3D CAD

Product Name	Gear Ratio	Mass kg	2D CAD
AZM66AC-HP■	**5**, **15**	1.9	B1165

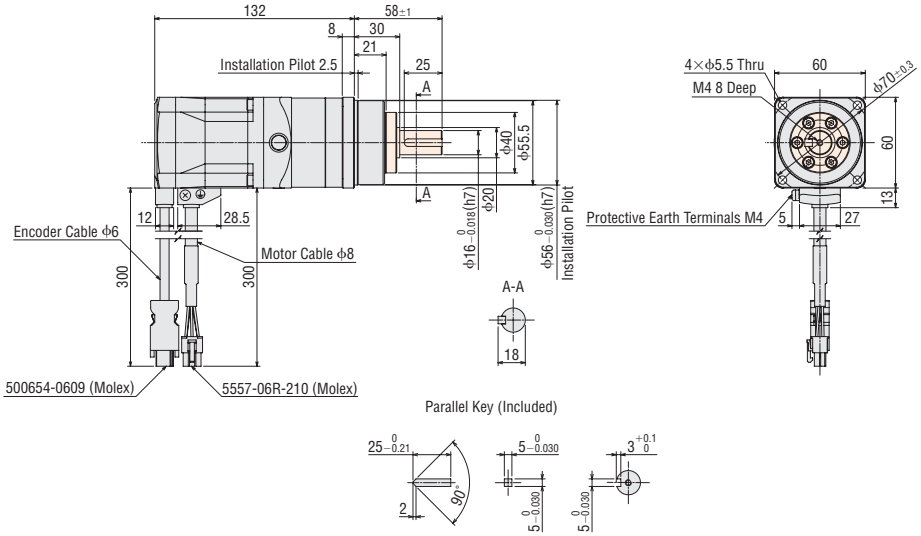

Frame Size 90 mm

2D & 3D CAD

Product Name	Gear Ratio	Mass kg	2D CAD
AZM98AC-HP■	**5**, **15**	4.8	B1187

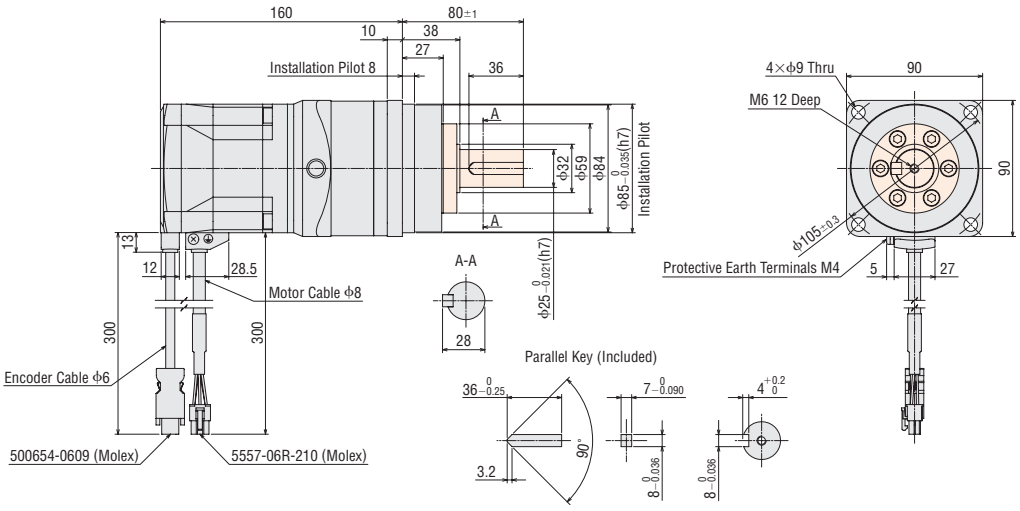

● The ▭ areas in the dimensions are rotating parts.

● A number indicating the gear ratio is specified where the box ■ is located in the product name.

◇HPG Geared Type Flange Output Type

Frame Size 40 mm

2D & 3D CAD

Product Name	Gear Ratio	Mass kg	2D CAD
AZM46AC-HP■F	**5, 9**	0.66	B1164

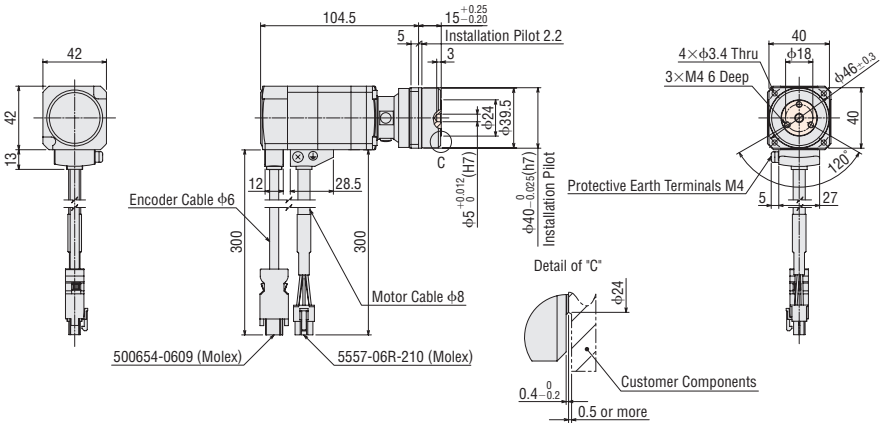

Frame Size 60 mm

2D & 3D CAD

Product Name	Gear Ratio	Mass kg	2D CAD
AZM66AC-HP■F	**5, 15**	1.8	B1166

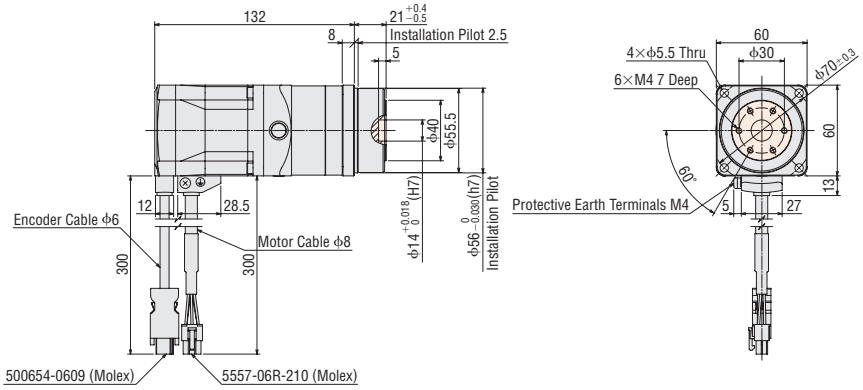

Frame Size 90 mm

2D & 3D CAD

Product Name	Gear Ratio	Mass kg	2D CAD
AZM98AC-HP■F	**5**	4.5	B1188
	15	4.4	

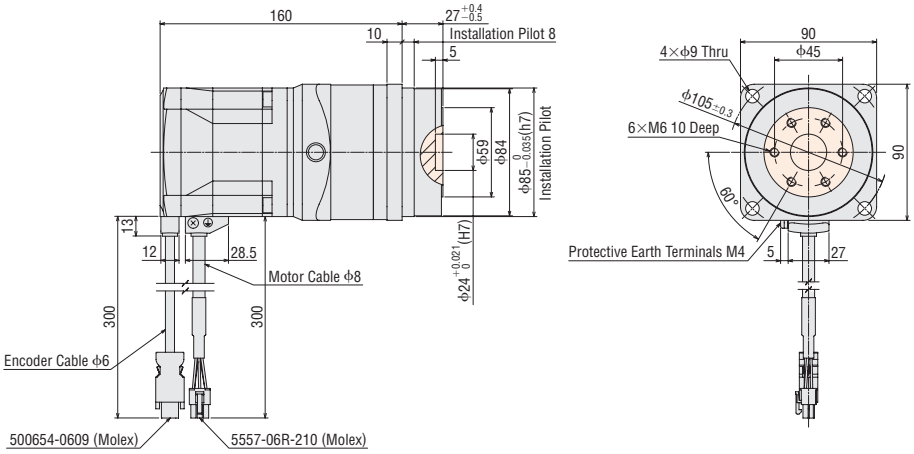

● The ▭ areas in the dimensions are rotating parts.
● A number indicating the gear ratio is specified where the box ■ is located in the product name.

◇**HPG** Geared Type with Electromagnetic Brake Shaft Output Type

Frame Size 40 mm

2D & 3D CAD

Product Name	Gear Ratio	Mass kg	2D CAD
AZM46MC-HP■	**5**, **9**	0.88	B1222

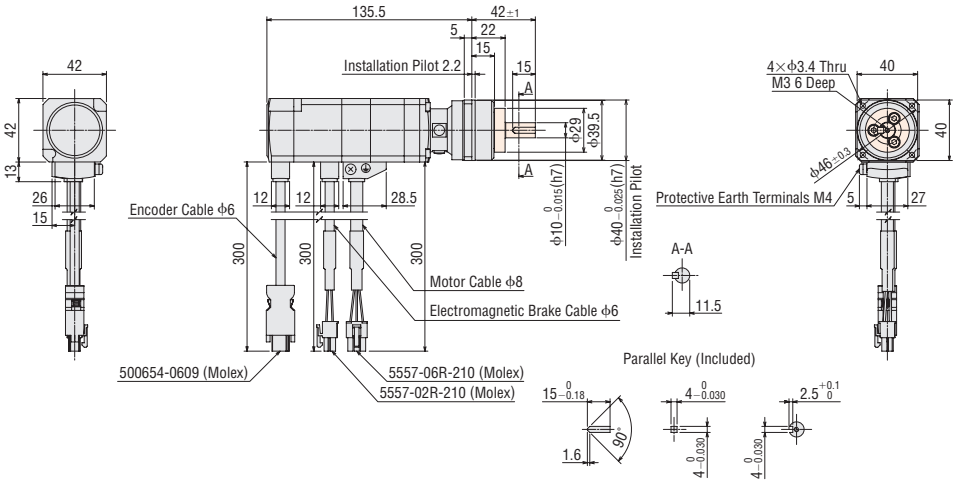

Frame Size 60 mm

2D & 3D CAD

Product Name	Gear Ratio	Mass kg	2D CAD
AZM66MC-HP■	**5**, **15**	2.3	B1224

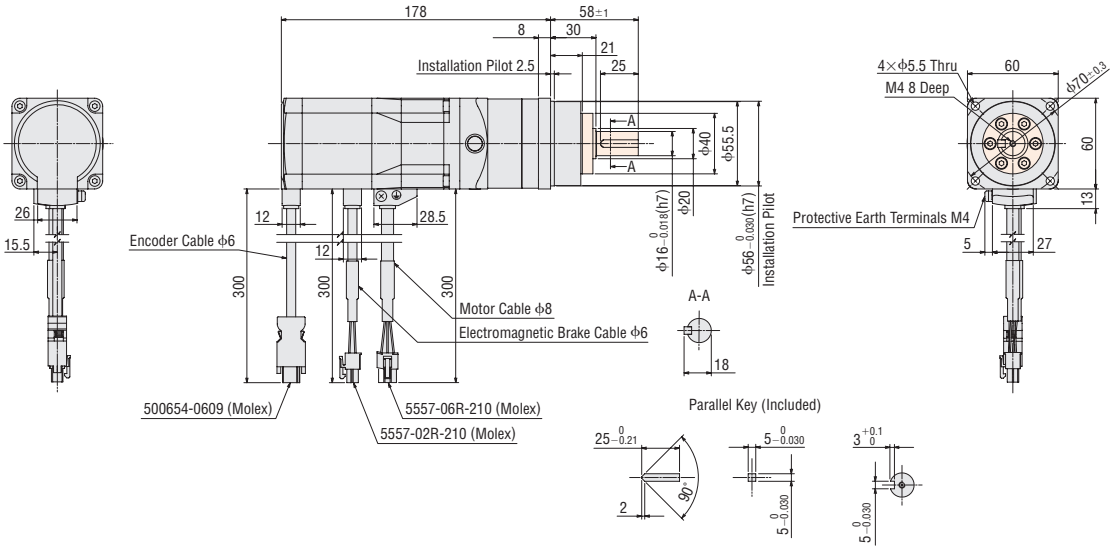

● The ▭ areas in the dimensions are rotating parts.

● A number indicating the gear ratio is specified where the box ■ is located in the product name.

Frame Size 90 mm

2D & 3D CAD

Product Name	Gear Ratio	Mass kg	2D CAD
AZM98MC-HP■	**5, 15**	5.4	B1193

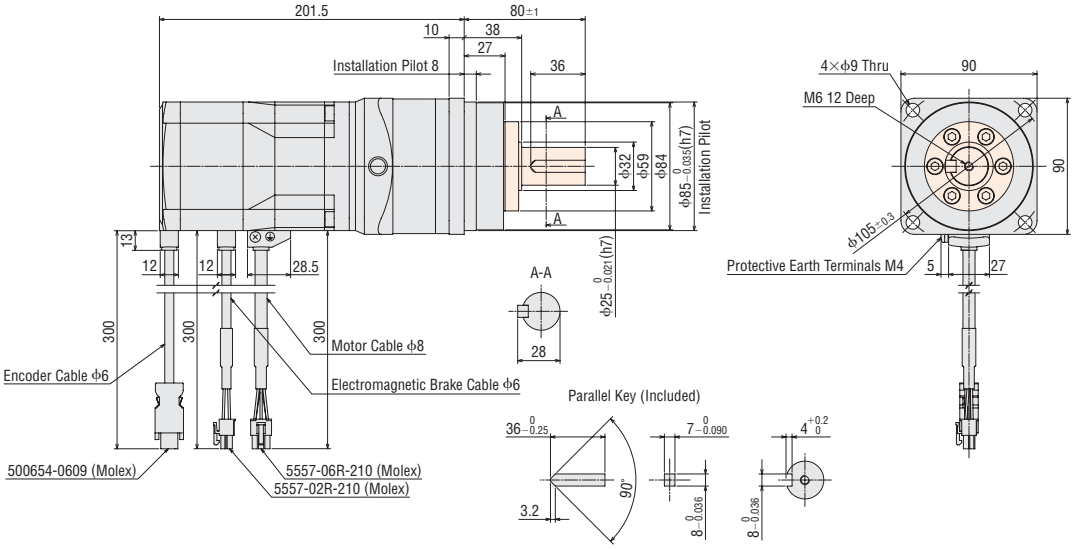

◇HPG Geared Type with Electromagnetic Brake Flange Output Type

Frame Size 40 mm

2D & 3D CAD

Product Name	Gear Ratio	Mass kg	2D CAD
AZM46MC-HP■F	**5, 9**	0.83	B1223

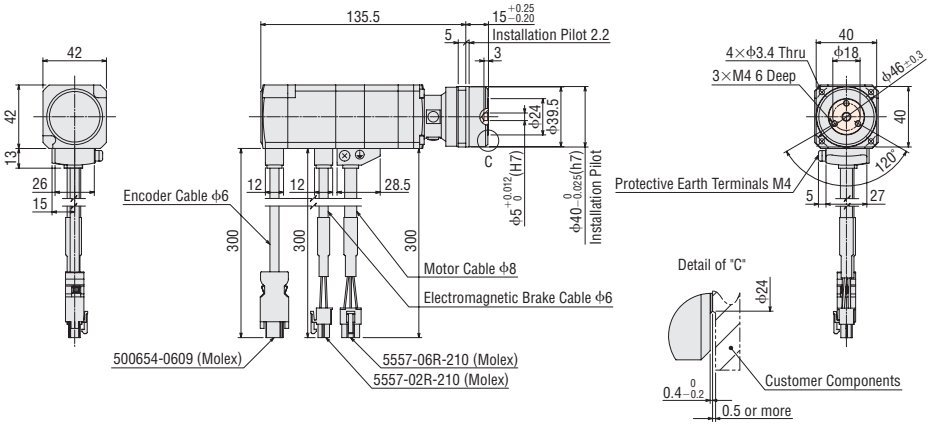

Frame Size 60 mm

2D & 3D CAD

Product Name	Gear Ratio	Mass kg	2D CAD
AZM66MC-HP■F	**5, 15**	2.2	B1225

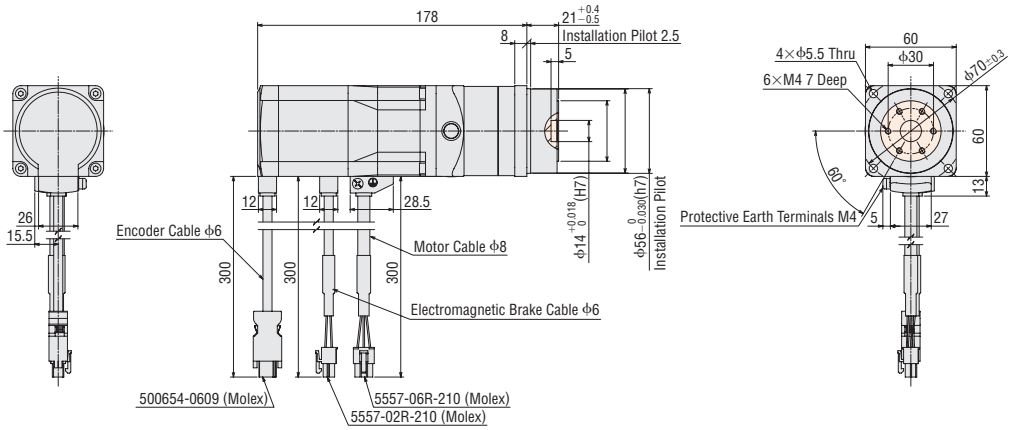

● The ▭ areas in the dimensions are rotating parts.
● A number indicating the gear ratio is specified where the box ■ is located in the product name.

Frame Size 90 mm

2D & 3D CAD

Product Name	Gear Ratio	Mass kg	2D CAD
AZM98MC-HP■F	**5**	5.1	B1194
	15	5	

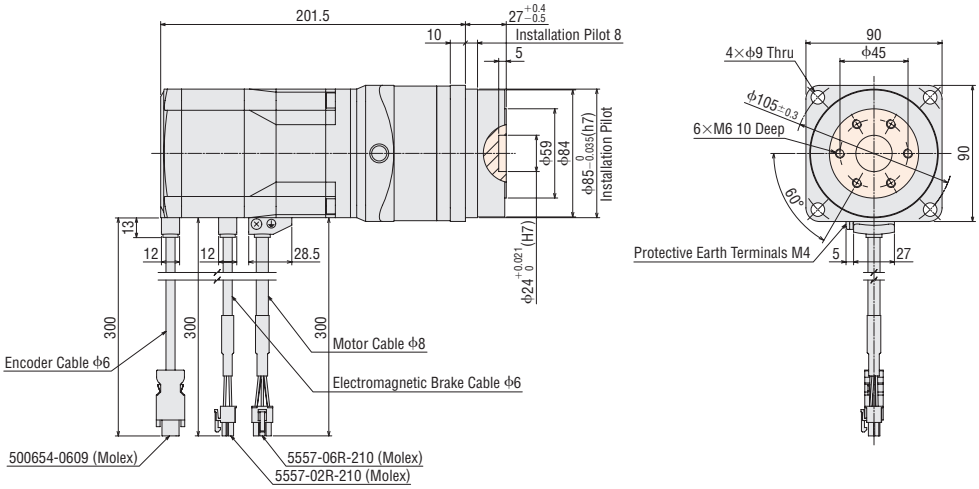

◇Harmonic Geared Type

Frame Size 42 mm

2D & 3D CAD

Product Name	Gear Ratio	Mass kg	2D CAD
AZM46AC-HS■	**50, 100**	0.65	B1167

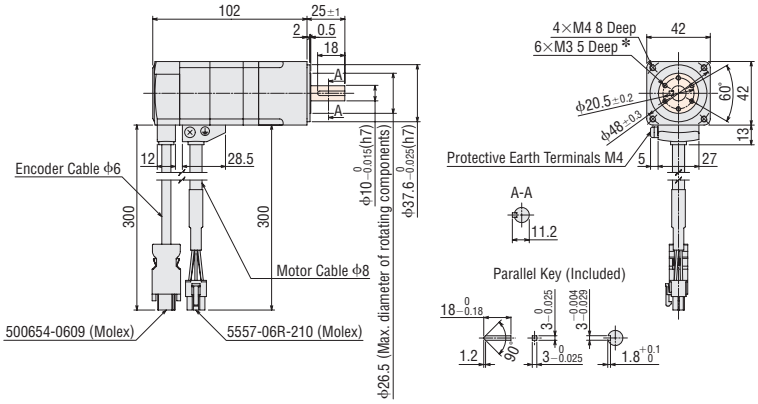

✻The position of the output shaft relative to the screw holes on the rotating part cannot be specified. Adjust the position via the size of the screw holes on the load installation surface.

Frame Size 60 mm

2D & 3D CAD

Product Name	Gear Ratio	Mass kg	2D CAD
AZM66AC-HS■	**50, 100**	1.4	B1168

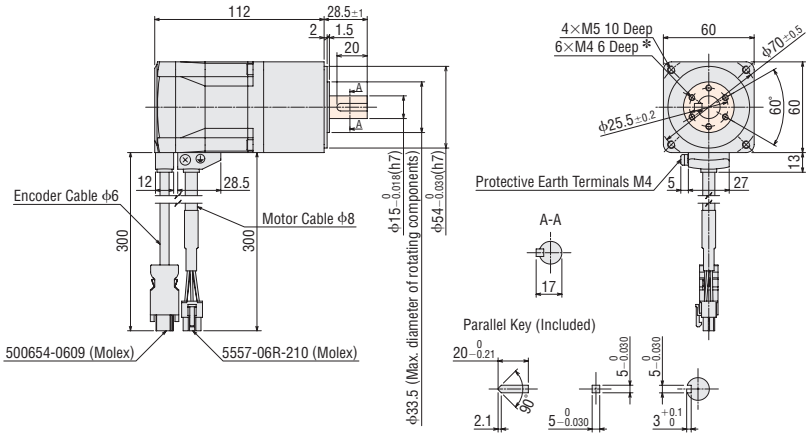

✻The position of the output shaft relative to the screw holes on the rotating part cannot be specified. Adjust the position via the size of the screw holes on the load installation surface.

● The ▭ areas in the dimensions are rotating parts.

● A number indicating the gear ratio is specified where the box ■ is located in the product name.

Frame Size 90 mm

2D & 3D CAD

Product Name	Gear Ratio	Mass kg	2D CAD
AZM98AC-HS■	**50, 100**	3.9	B1189

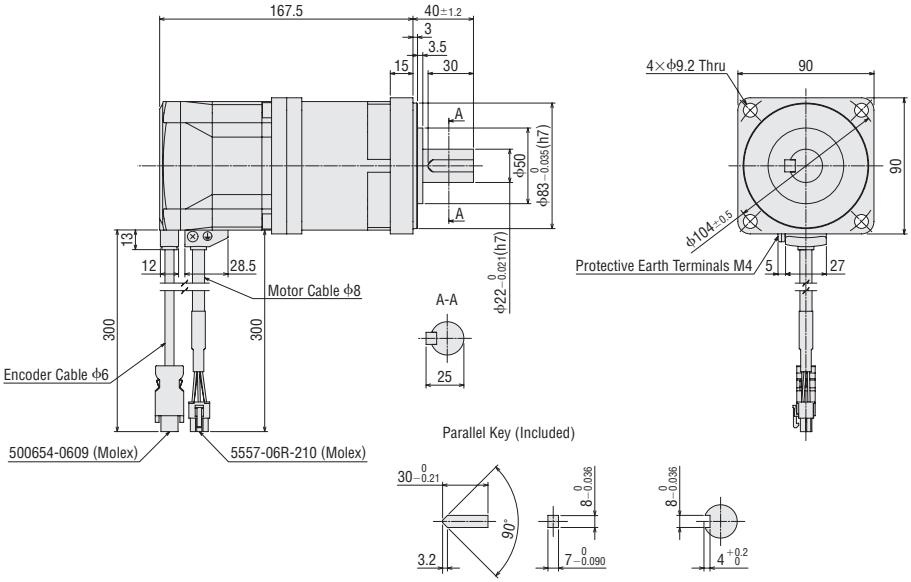

◇Harmonic Geared Type with an Electromagnetic Brake

Frame Size 42 mm

2D & 3D CAD

Product Name	Gear Ratio	Mass kg	2D CAD
AZM46MC-HS■	**50, 100**	0.82	B1226

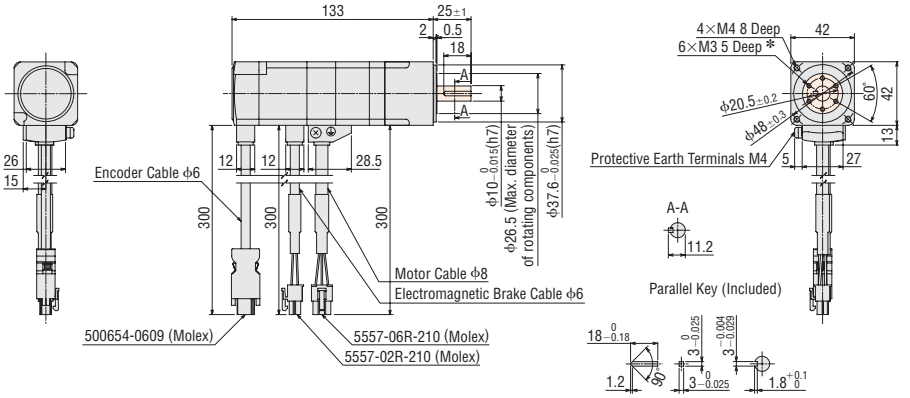

*The position of the output shaft relative to the screw holes on the rotating part cannot be specified. Adjust the position via the size of the screw holes on the load installation surface.

Frame Size 60 mm

2D & 3D CAD

Product Name	Gear Ratio	Mass kg	2D CAD
AZM66MC-HS■	**50, 100**	1.8	B1227

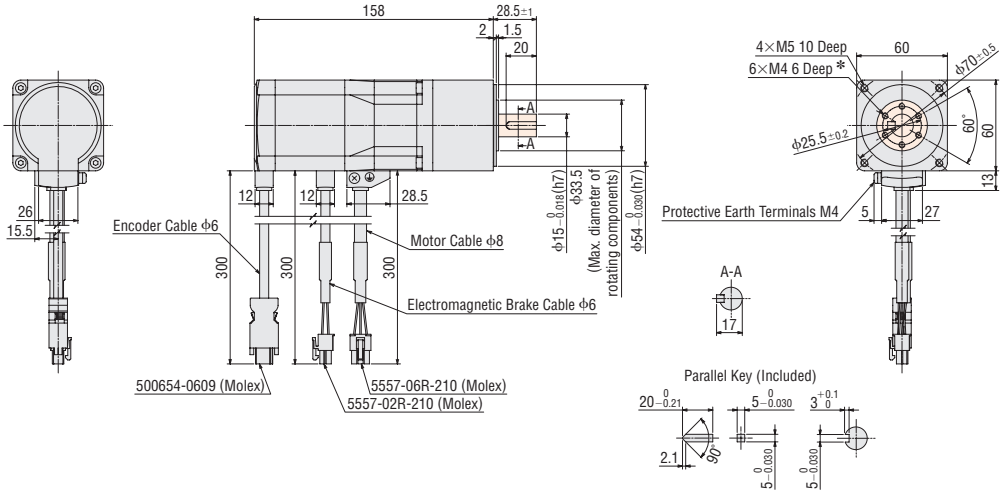

*The position of the output shaft relative to the screw holes on the rotating part cannot be specified. Adjust the position via the size of the screw holes on the load installation surface.

- The ▭ areas in the dimensions are rotating parts.
- A number indicating the gear ratio is specified where the box ■ is located in the product name.

Frame Size 90 mm

2D & 3D CAD

Product Name	Gear Ratio	Mass kg	2D CAD
AZM98MC-HS■	**50, 100**	4.5	B1195

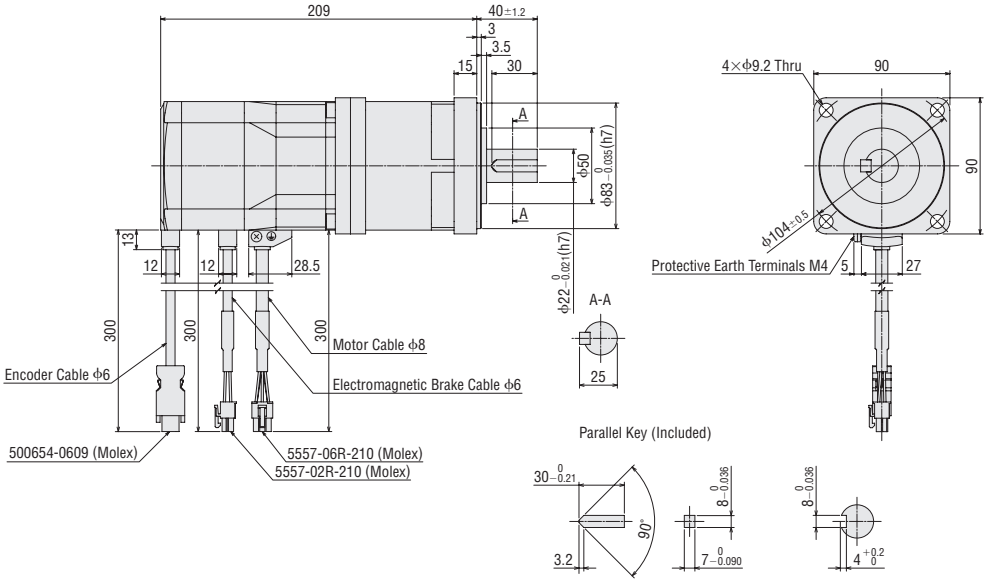

● A number indicating the gear ratio is specified where the box ■ is located in the product name.

Driver

2D & 3D CAD

Type	Product Name	Mass kg	2D CAD
Built-in Controller Type	**AZD-AD**, **AZD-CD**	0.65	B1095
Pulse Input Type with RS-485 Communication	**AZD-AX**, **AZD-CX**		
Pulse Input Type	**AZD-A**, **AZD-C**		B1097

● The dimensions are for the built-in controller type. The dimensions and included items are the same for all drivers in the table.

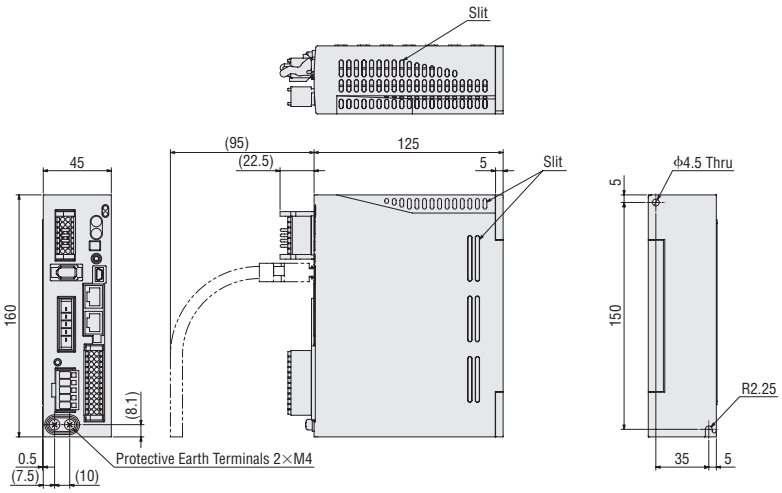

● Included Items
24 VDC Power Supply Input/Electromagnetic Brake Connection/Regeneration Unit Thermal Input/Power Shut Down Signal I/O Connector (CN1)
Connector: DFMC1,5/7-ST-3,5-LR
(PHOENIX CONTACT Inc.)

Connector for Main Power/Regeneration Unit (CN4)
Connector: 05JFAT-SAXGDK-H5.0
(J.S.T.MFG.CO.,LTD.)
Connector Wiring Lever

I/O Signals Connector (CN5)
Connector: DFMC1,5/12-ST-3,5
(PHOENIX CONTACT Inc.)

2D & 3D CAD

Type	Product Name	Mass kg	2D CAD
EtherCAT Drive Profile compatible	**AZD-AED**, **AZD-CED**	0.68	B1504
EtherNet/IP compatible	**AZD-AEP**, **AZD-CEP**		
PROFINET compatible	**AZD-APN**, **AZD-CPN**		

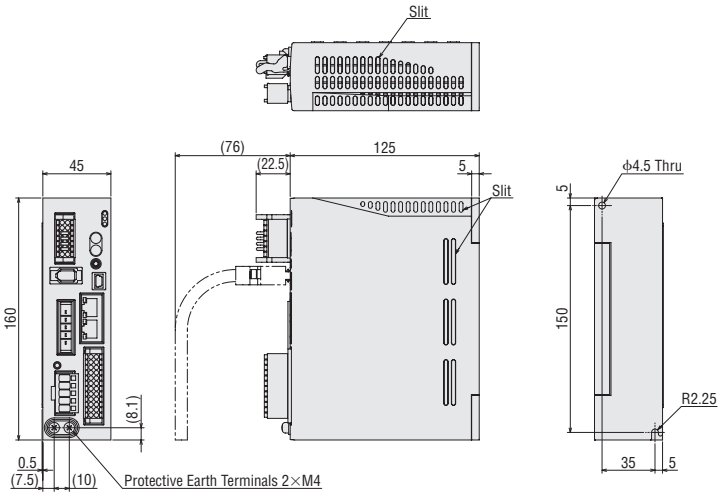

● Included Items
Control Power Supply Input/Electromagnetic Brake Connection/Regeneration Unit Thermal Input/Power Shut Down Signal I/O Connector (CN1)
Connector: DFMC1,5/7-ST-3,5-LR
(PHOENIX CONTACT Inc.)

Connector for Main Power/Regeneration Unit (CN4)
Connector: 05JFAT-SAXGDK-H5.0
(J.S.T.MFG.CO.,LTD.)
Connector Wiring Lever

I/O Signals Connector (CN7)
Connector: DFMC1,5/12-ST-3,5
(PHOENIX CONTACT Inc.)

2D & 3D CAD

Type	Product Name	Mass kg	2D CAD
MECHATROLINK-Ⅲ compatible	**AZD-AM3**, **AZD-CM3**	0.66	B1540
SSCNETⅢ/H compatible	**AZD-AS3**, **AZD-CS3**	0.67	B1539

● The dimensions are SSCNETⅢ/H compatible. The dimensions and included items are the same for all drivers in the table.

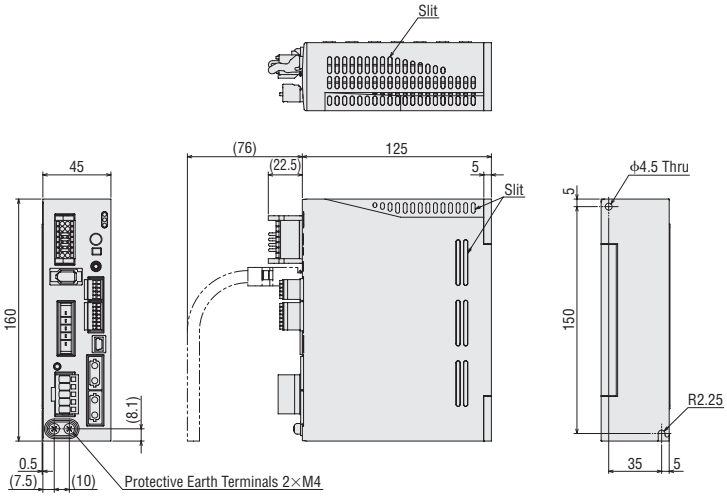

● Included Items
Control Power Supply Input/Electromagnetic Brake Connection/Regeneration Unit Thermal Input/Power Shut Down Signal I/O Connector (CN1)
Connector: DFMC1,5/7-ST-3,5-LR
(PHOENIX CONTACT Inc.)

Connector for Main Power/Regeneration Unit (CN4)
Connector: 05JFAT-SAXGDK-H5.0
(J.S.T.MFG.CO.,LTD.)
Connector Wiring Lever

Input Signal Connector (CN5)
Connector: FK-MC 0,5/5-ST-2,5
(PHOENIX CONTACT Inc.)

Output Signal Connector (CN6)
Connector: FK-MC 0,5/7-ST-2,5
(PHOENIX CONTACT Inc.)

Connector cap* (For CN7 A, CN7 B)
*Included with SSCNETⅢ/H.

Connection and Operation

Names of Driver Parts

For details about each function, refer to the operating manual for the **AZ** Series. Either download operating manuals from the Oriental Motor website or contact your nearest Oriental Motor sales office.

◇Built-in Controller Type, Pulse Input Type with RS-485 Communication

The photos show the built-in controller type.

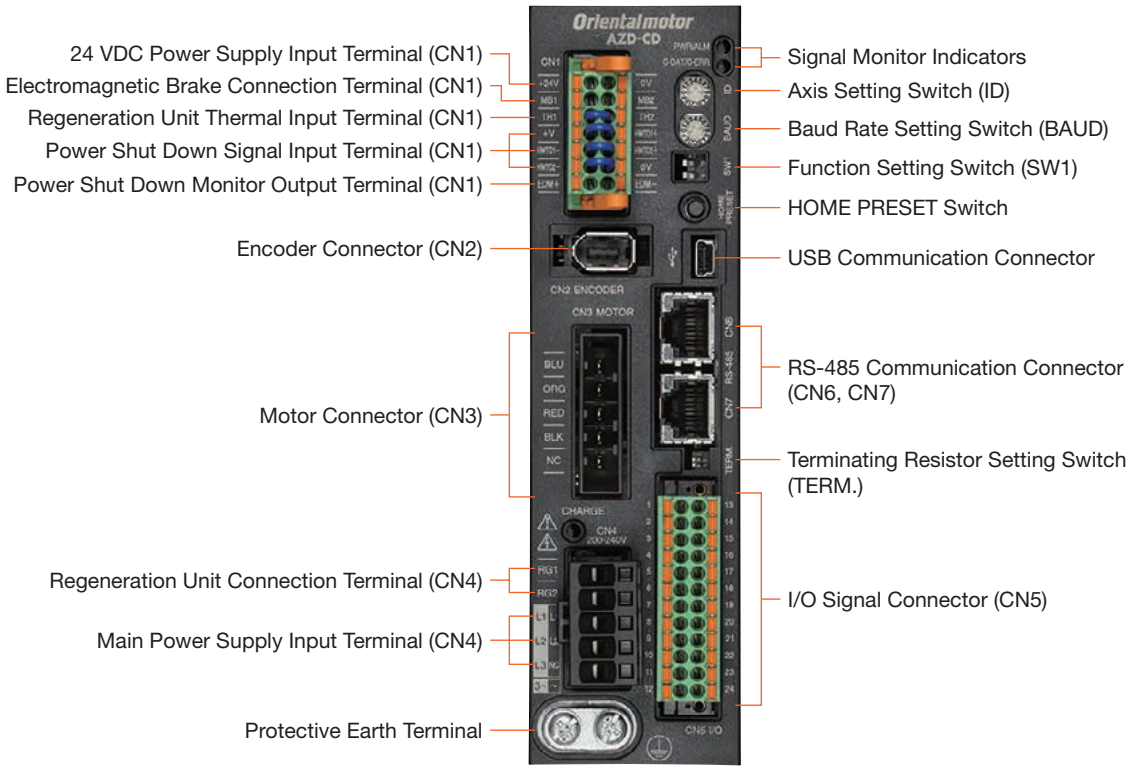

◇Pulse Input Type

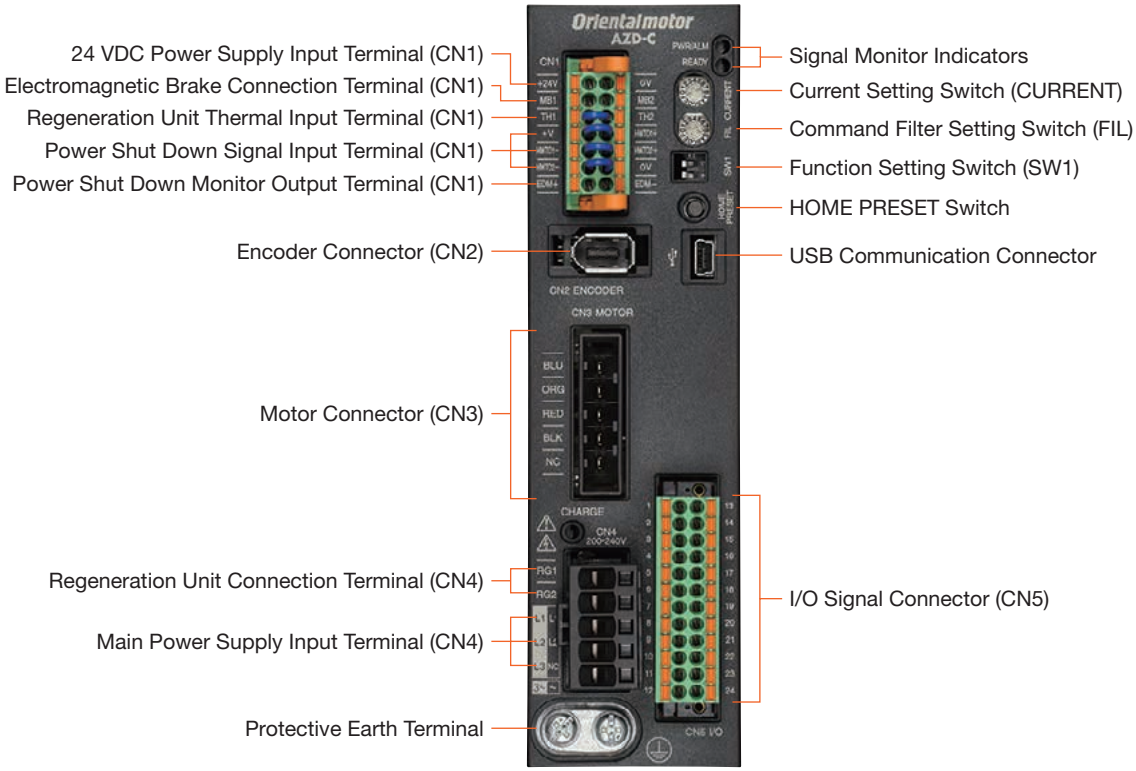

◇EtherNet/IP compatible

◇EtherCAT Drive Profile compatible

◇PROFINET compatible

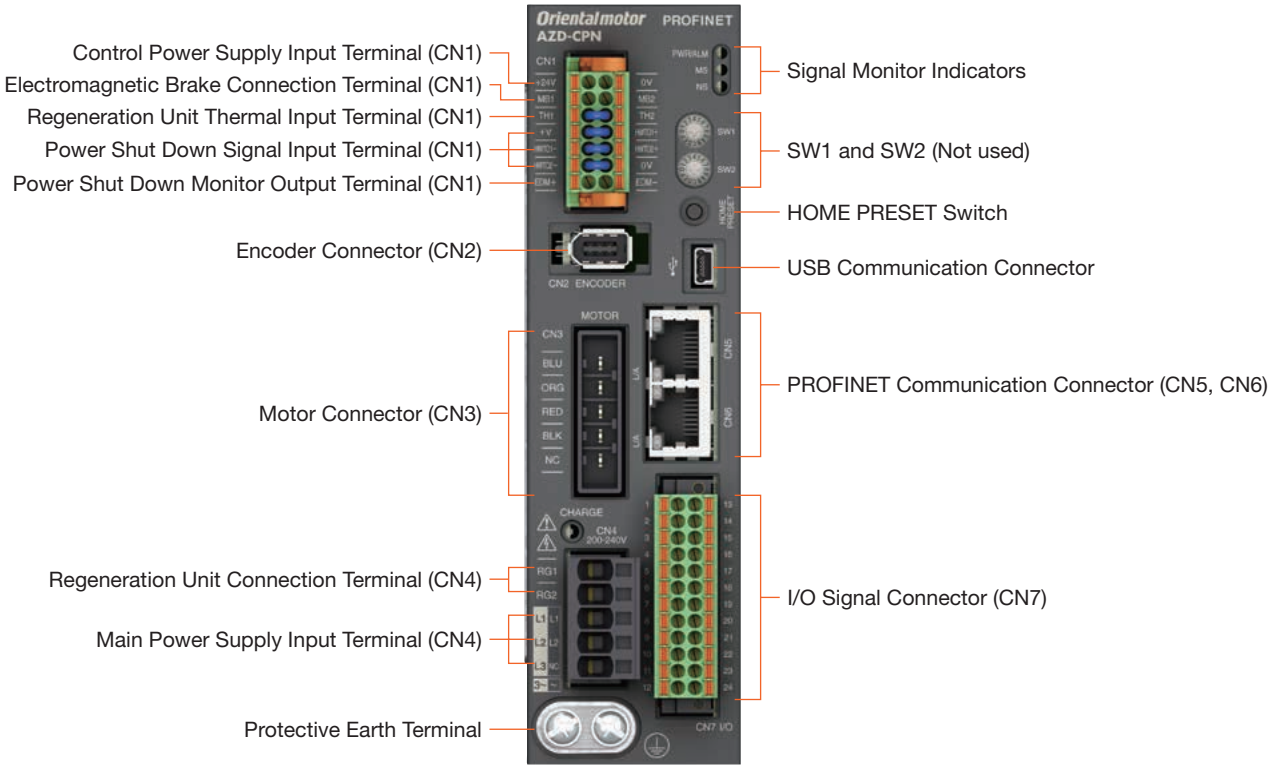

◇MECHATROLINK-Ⅲ compatible

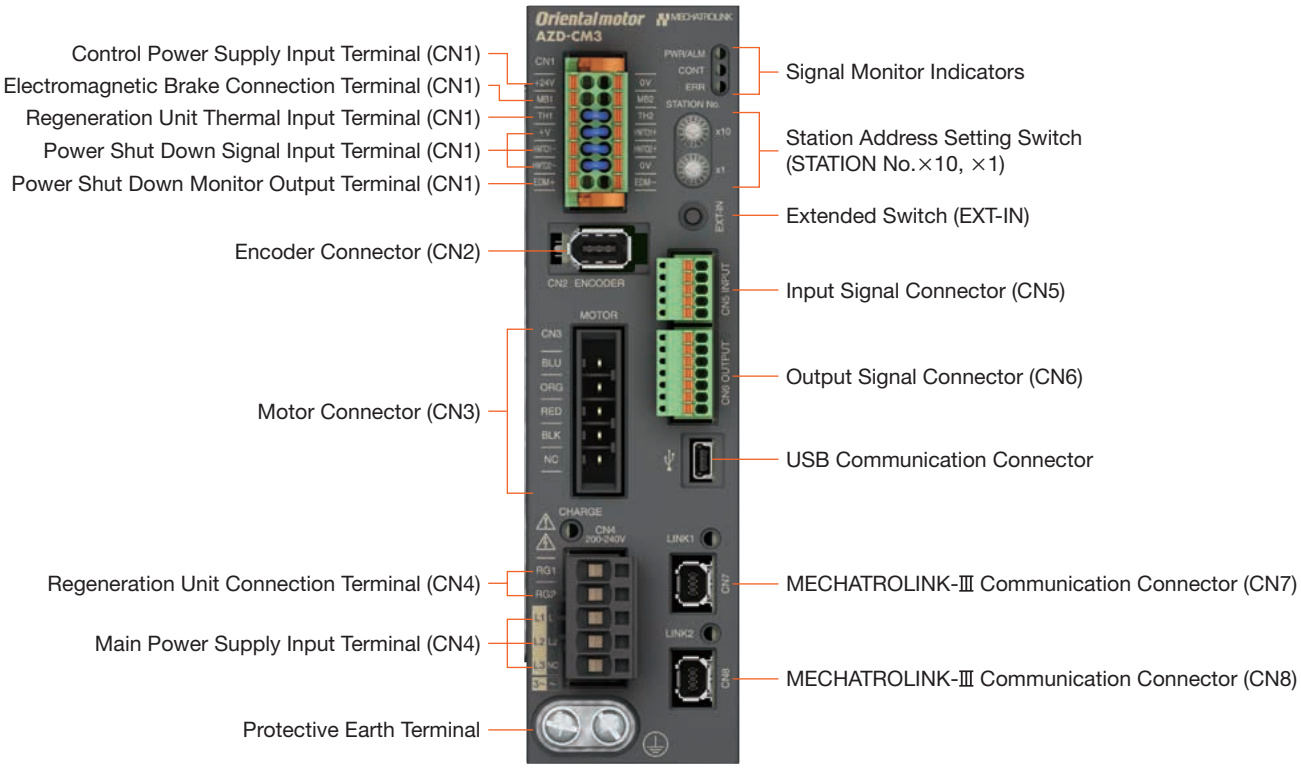

◇SSCNETⅢ/H compatible

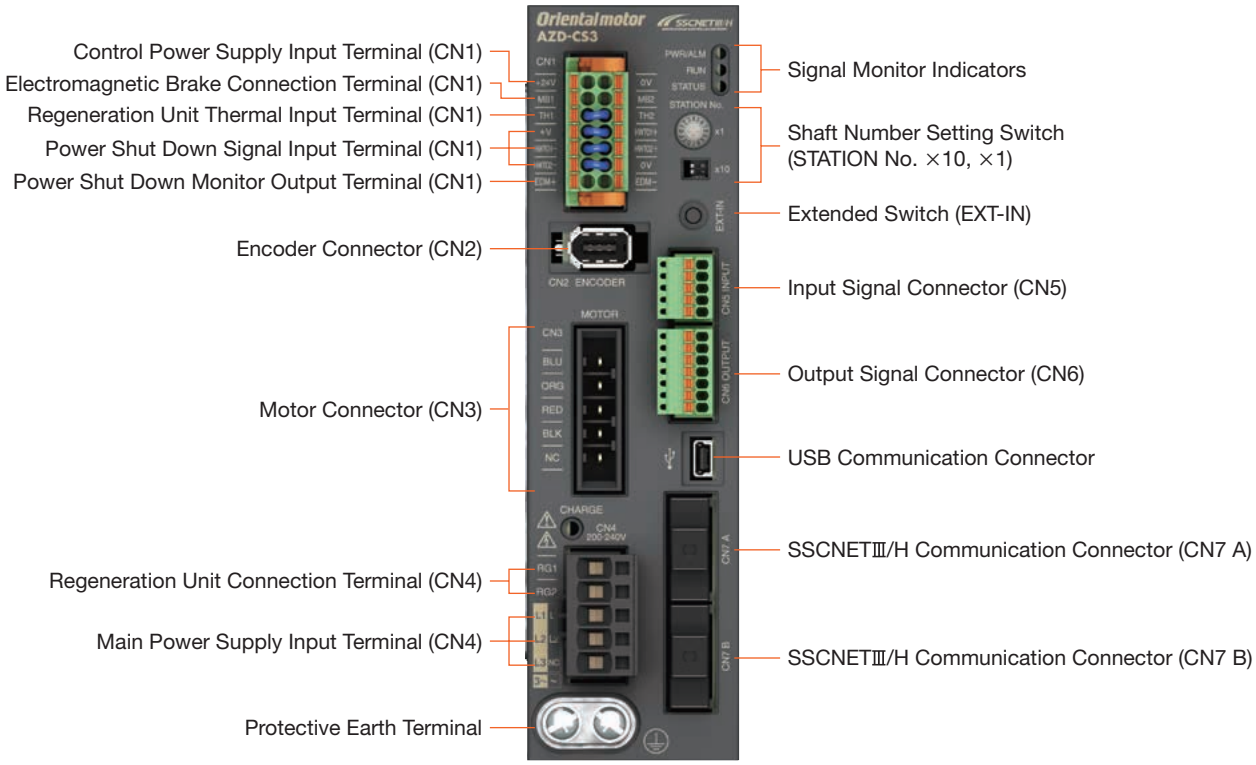

●USB Cable Connection

A USB cable is required for connecting the driver to the computer on which the support software **MEXE02** is installed.
Use a USB cable with the following specifications.

Specifications	USB 2.0 (Full Speed)
Cables	Length: 3 m or less Configuration: A to mini B

●Connection Diagrams

◇Built-in Controller Type

•Diagram for Connection with Current Sink Output Circuit

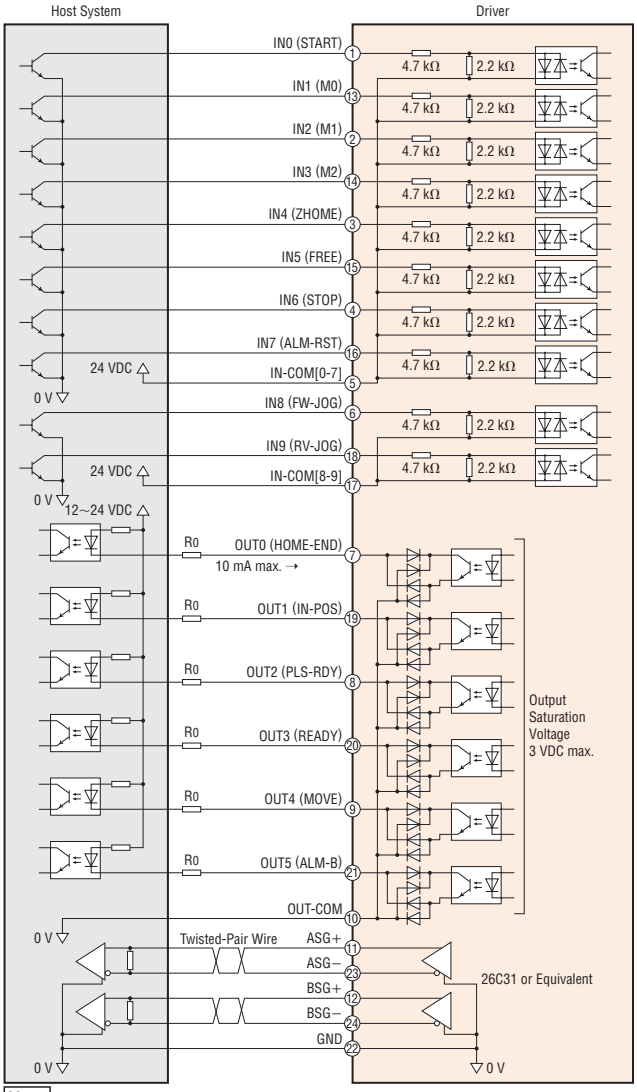

Note

- Use 24 VDC for the input signals.
- Use output signal at 12~24 VDC 10 mA or less. When the current value exceeds 10 mA, connect an external resistor R_0 to reduce the current to 10 mA or less.
- Provide a distance of 200 mm or more between the signal lines and power lines (power supply lines, motor lines).
  Do not run the signal lines in the same piping as power lines or bundle them with power lines.
- If noise generated by the motor cable or power supply cable causes a problem with the specific wiring or layout, shield the cable or use ferrite cores.

•Diagram for Connection with Current Source Output Circuit

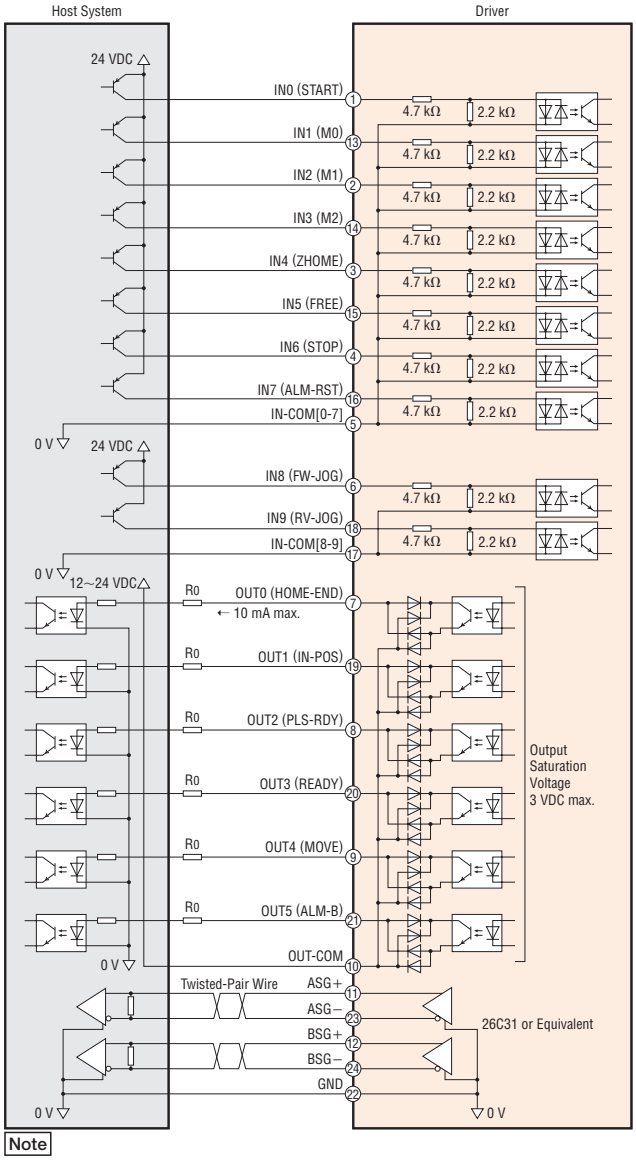

Note

- Use 24 VDC for the input signals.
- Use output signal at 12~24 VDC 10 mA or less. When the current value exceeds 10 mA, connect an external resistor R_0 to reduce the current to 10 mA or less.
- Provide a distance of 200 mm or more between the signal lines and power lines (power supply lines, motor lines).
  Do not run the signal lines in the same piping as power lines or bundle them with power lines.
- If noise generated by the motor cable or power supply cable causes a problem with the specific wiring or layout, shield the cable or use ferrite cores.

◇Pulse Input Type with RS-485 Communication, Pulse Input Type

•Diagram for Connection with Current Sink Output Circuit

When the pulse input is the line driver

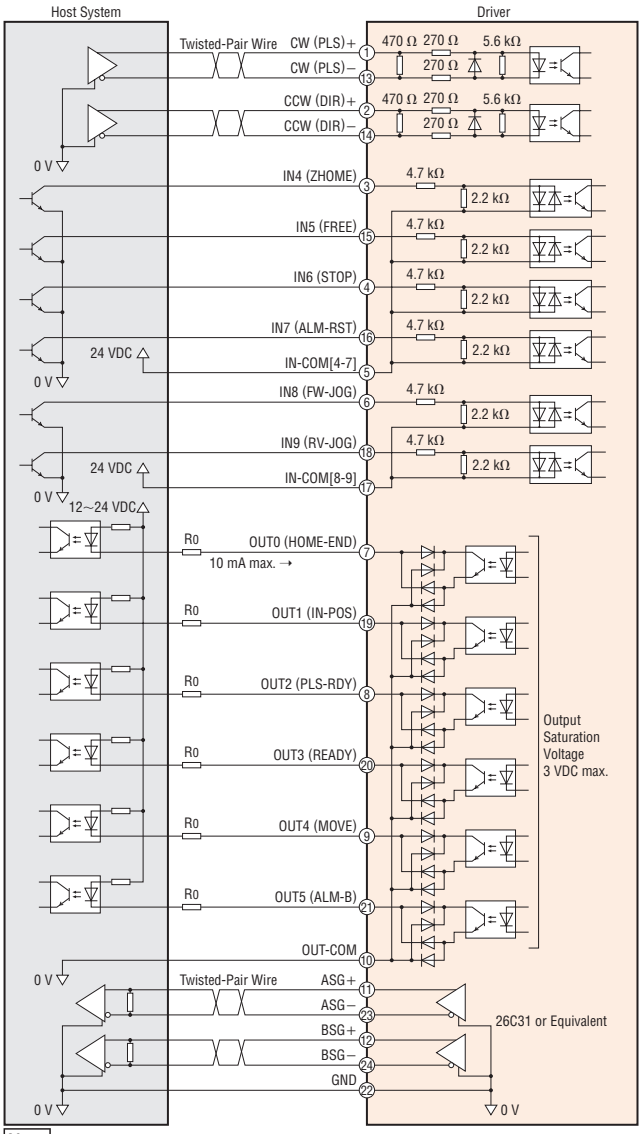

Note

- Use 24 VDC for the input signals.
- Use output signal at 12~24 VDC 10 mA or less. When the current value exceeds 10 mA, connect an external resistor R_0 to reduce the current to 10 mA or less.
- Provide a distance of 200 mm or more between the signal lines and power lines (power supply lines, motor lines).
  Do not run the signal lines in the same piping as power lines or bundle them with power lines.
- If noise generated by the motor cable or power supply cable causes a problem with the specific wiring or layout, shield the cable or use ferrite cores.

When the pulse input is open collector

•When the pulse input signal is 5 VDC

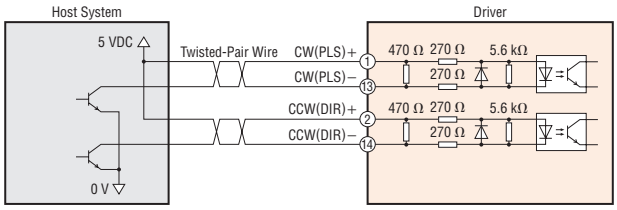

•When the pulse input signal is 24 VDC

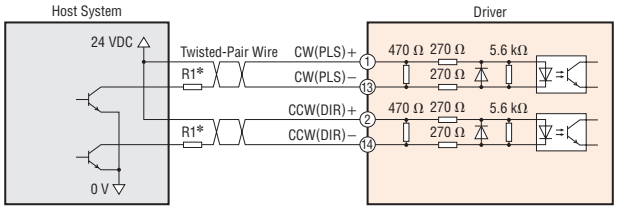

*R_1: 1.2 kΩ~2.2 kΩ 0.5 W min.

Note

- Use 5~24 VDC for CW (PLS) input and CCW (DIR) input. If used at 24 VDC, connect external resistor R_1 (1.2 kΩ~2.2 kΩ 0.5 W min.)
- If used at 5 VDC, connect the pulse input signal directly without connecting an external resistor.

• Diagram for Connection with Current Source Output Circuit

When the pulse input is the line driver

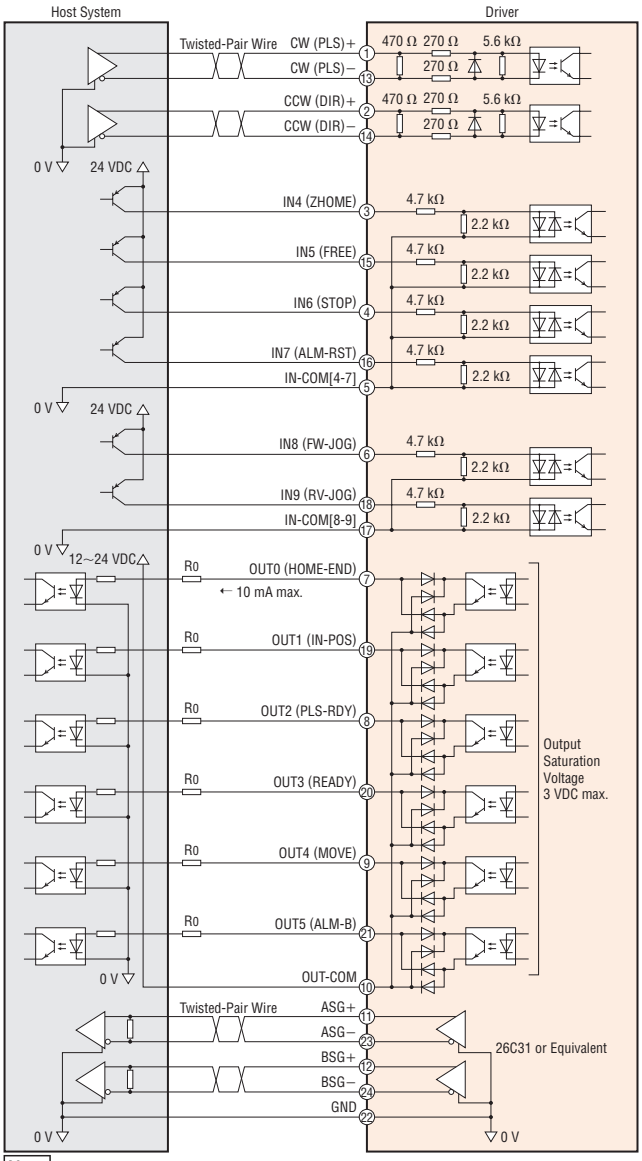

Note

- Use 24 VDC for the input signals.
- Use output signal at 12~24 VDC 10 mA or less. When the current value exceeds 10 mA, connect an external resistor R_0 to reduce the current to 10 mA or less.
- Provide a distance of 200 mm or more between the signal lines and power lines (power supply lines, motor lines).
  Do not run the signal lines in the same piping as power lines or bundle them with power lines.
- If noise generated by the motor cable or power supply cable causes a problem with the specific wiring or layout, shield the cable or use ferrite cores.

When the pulse input is open collector

• When the pulse input signal is 5 VDC

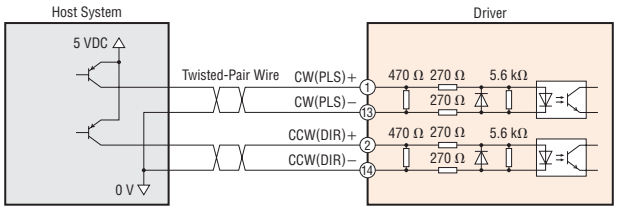

• When the pulse input signal is 24 VDC

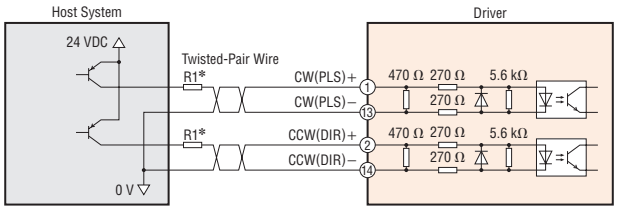

*R_1: 1.2 kΩ~2.2 kΩ 0.5 W min.

Note

- Use 5~24 VDC for CW (PLS) input and CCW (DIR) input. If used at 24 VDC, connect external resistor R_1 (1.2 kΩ~2.2 kΩ 0.5 W min.)
- If used at 5 VDC, connect the pulse input signal directly without connecting an external resistor.

◇EtherNet/IP compatible

•Diagram for Connection with Current Sink Output Circuit

When the pulse input is the line driver

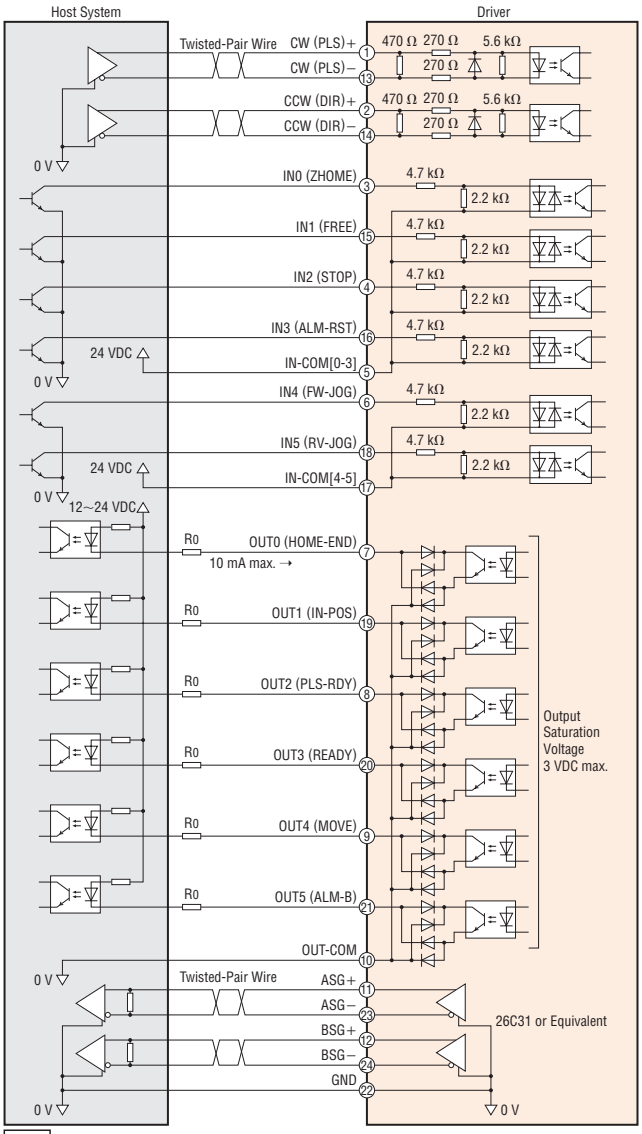

Note

- Use 24 VDC for the input signals.
- Use output signal at 12~24 VDC 10 mA or less. When the current value exceeds 10 mA, connect an external resistor R_0 to reduce the current to 10 mA or less.
- Provide a distance of 200 mm or more between the signal lines and power lines (power supply lines, motor lines).
  Do not run the signal lines in the same piping as power lines or bundle them with power lines.
- If noise generated by the motor cable or power supply cable causes a problem with the specific wiring or layout, shield the cable or use ferrite cores.

When the pulse input is open collector

•When the pulse input signal is 5 VDC

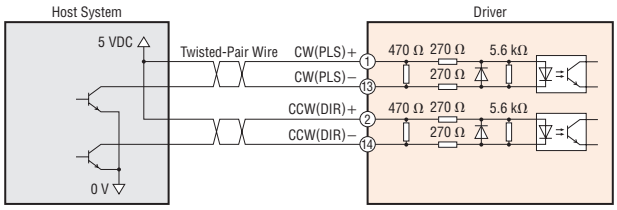

•When the pulse input signal is 24 VDC

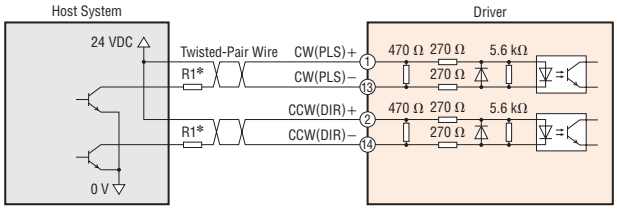

*R_1: 1.2 kΩ~2.2 kΩ 0.5 W min.

Note

- Use 5~24 VDC for CW (PLS) input and CCW (DIR) input. If used at 24 VDC, connect external resistor R_1 (1.2 kΩ~2.2 kΩ 0.5 W min.)
- If used at 5 VDC, connect the pulse input signal directly without connecting an external resistor.

• Diagram for Connection with Current Source Output Circuit

When the pulse input is the line driver

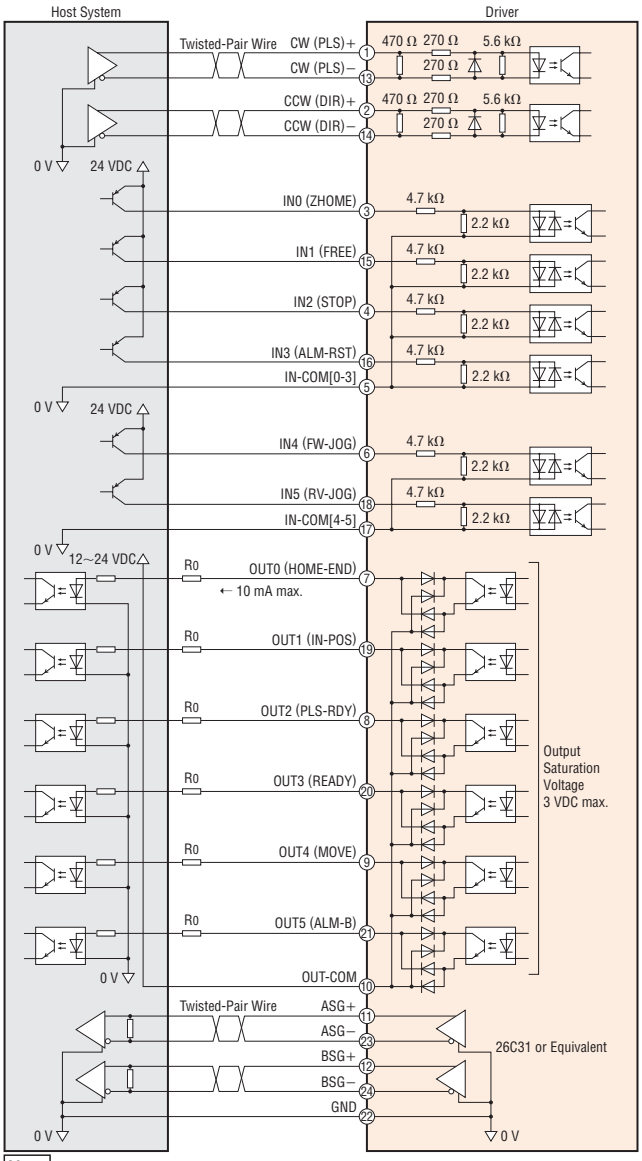

Note

- Use 24 VDC for the input signals.
- Use output signal at 12~24 VDC 10 mA or less. When the current value exceeds 10 mA, connect an external resistor R_0 to reduce the current to 10 mA or less.
- Provide a distance of 200 mm or more between the signal lines and power lines (power supply lines, motor lines). Do not run the signal lines in the same piping as power lines or bundle them with power lines.
- If noise generated by the motor cable or power supply cable causes a problem with the specific wiring or layout, shield the cable or use ferrite cores.

When the pulse input is open collector

• When the pulse input signal is 5 VDC

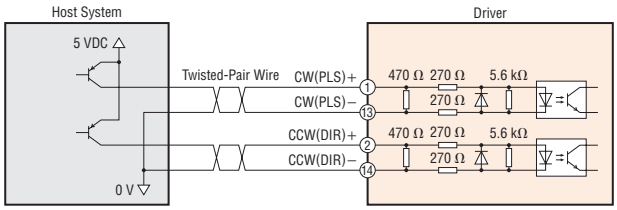

• When the pulse input signal is 24 VDC

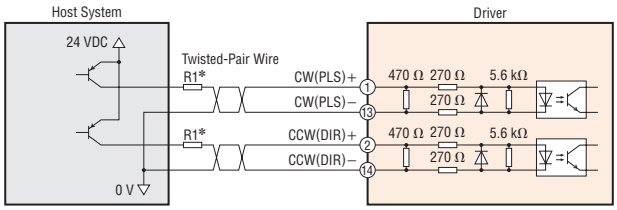

*R_1: 1.2 kΩ~2.2 kΩ 0.5 W min.

Note

- Use 5~24 VDC for CW (PLS) input and CCW (DIR) input. If used at 24 VDC, connect external resistor R_1 (1.2 kΩ~2.2 kΩ 0.5 W min.)
- If used at 5 VDC, connect the pulse input signal directly without connecting an external resistor.

◇EtherCAT Drive Profile compatible

•Diagram for Connection with Current Sink Output Circuit

When the pulse input is the line driver

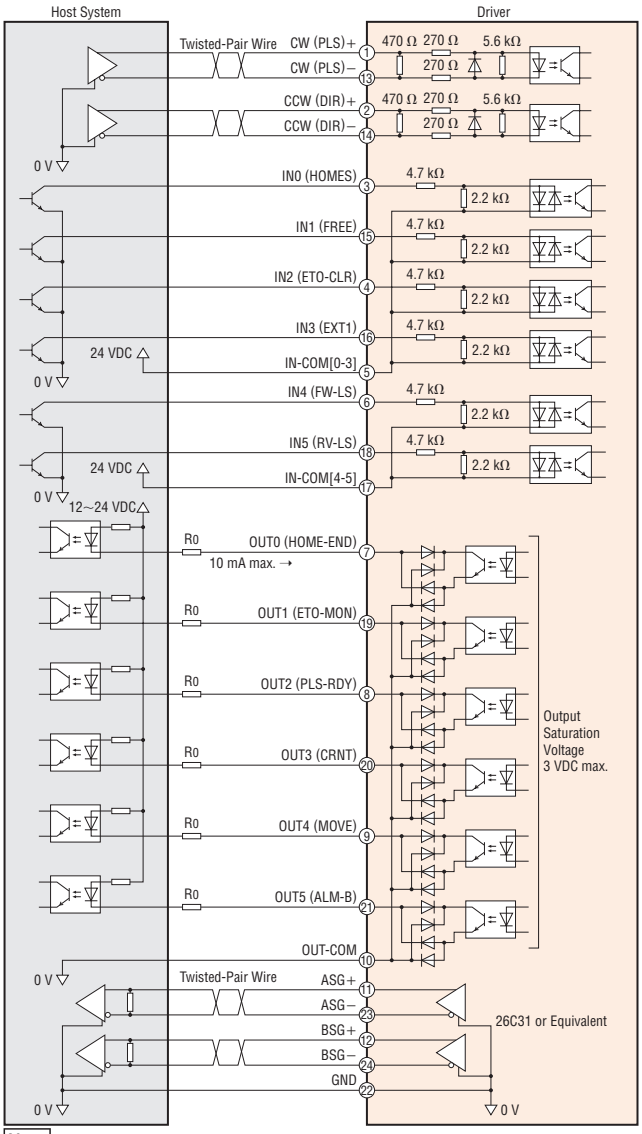

Note

- Use 24 VDC for the input signals.
- Use output signal at 12~24 VDC 10 mA or less. When the current value exceeds 10 mA, connect an external resistor R_0 to reduce the current to 10 mA or less.
- Provide a distance of 200 mm or more between the signal lines and power lines (power supply lines, motor lines). Do not run the signal lines in the same piping as power lines or bundle them with power lines.
- If noise generated by the motor cable or power supply cable causes a problem with the specific wiring or layout, shield the cable or use ferrite cores.

When the pulse input is open collector

•When the pulse input signal is 5 VDC

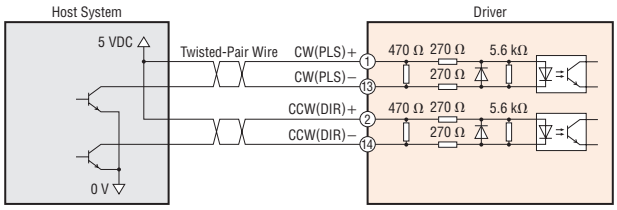

•When the pulse input signal is 24 VDC

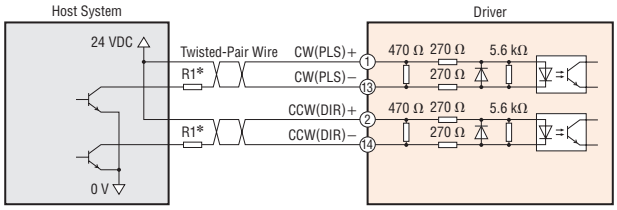

*R_1: 1.2 kΩ~2.2 kΩ 0.5 W min.

Note

- Use 5~24 VDC for CW (PLS) input and CCW (DIR) input. If used at 24 VDC, connect external resistor R_1 (1.2 kΩ~2.2 kΩ 0.5 W min.)
- If used at 5 VDC, connect the pulse input signal directly without connecting an external resistor.

• Diagram for Connection with Current Source Output Circuit

When the pulse input is the line driver

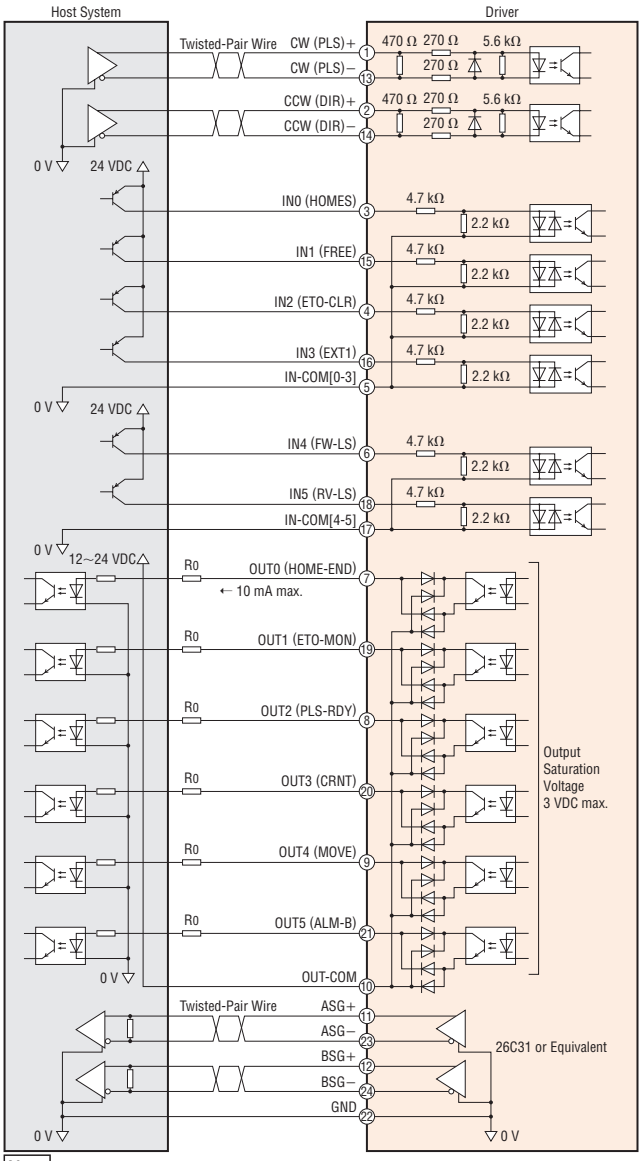

Note

- Use 24 VDC for the input signals.
- Use output signal at 12~24 VDC 10 mA or less. When the current value exceeds 10 mA, connect an external resistor R_0 to reduce the current to 10 mA or less.
- Provide a distance of 200 mm or more between the signal lines and power lines (power supply lines, motor lines). Do not run the signal lines in the same piping as power lines or bundle them with power lines.
- If noise generated by the motor cable or power supply cable causes a problem with the specific wiring or layout, shield the cable or use ferrite cores.

When the pulse input is open collector

• When the pulse input signal is 5 VDC

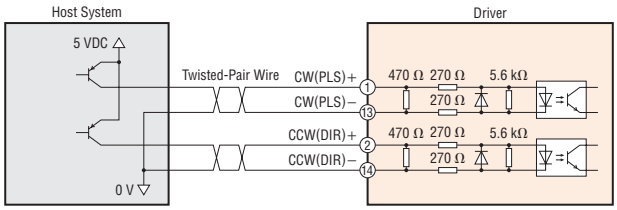

• When the pulse input signal is 24 VDC

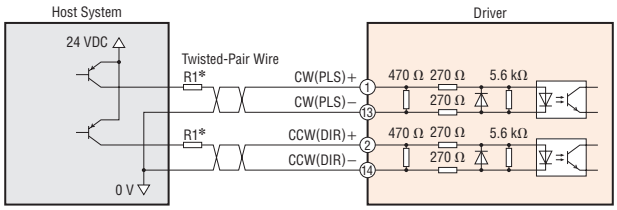

*R_1: 1.2 kΩ~2.2 kΩ 0.5 W min.

Note

- Use 5~24 VDC for CW (PLS) input and CCW (DIR) input. If used at 24 VDC, connect external resistor R_1 (1.2 kΩ~2.2 kΩ 0.5 W min.)
- If used at 5 VDC, connect the pulse input signal directly without connecting an external resistor.

◇PROFINET compatible

•Diagram for Connection with Current Sink Output Circuit

When the pulse input is the line driver

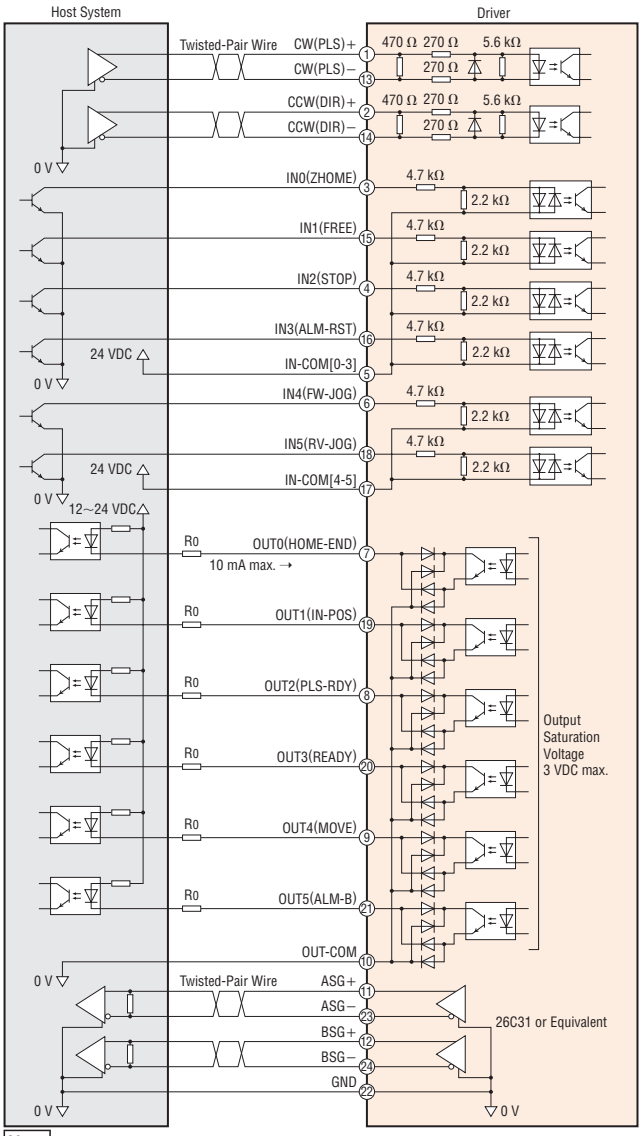

Note

- Use 24 VDC for the input signals.
- Use output signal at 12~24 VDC 10 mA or less. When the current value exceeds 10 mA, connect an external resistor R_0 to reduce the current to 10 mA or less.
- Provide a distance of 200 mm or more between the signal lines and power lines (power supply lines, motor lines). Do not run the signal lines in the same piping as power lines or bundle them with power lines.
- If noise generated by the motor cable or power supply cable causes a problem with the specific wiring or layout, shield the cable or use ferrite cores.

When the pulse input is open collector

•When the pulse input signal is 5 VDC

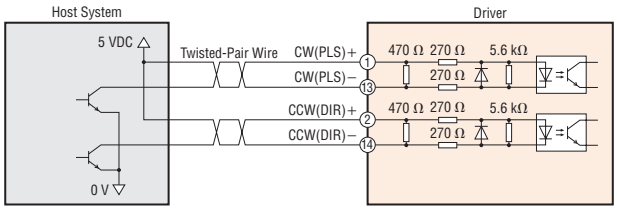

•When the pulse input signal is 24 VDC

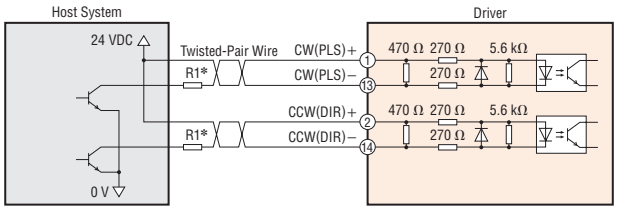

*R1: 1.2 kΩ~2.2 kΩ 0.5 W min.

Note

- Use 5~24 VDC for CW (PLS) input and CCW (DIR) input. If used at 24 VDC, connect external resistor R_1 (1.2 kΩ~2.2 kΩ 0.5 W min.)
- If used at 5 VDC, connect the pulse input signal directly without connecting an external resistor.

• Diagram for Connection with Current Source Output Circuit

When the pulse input is the line driver

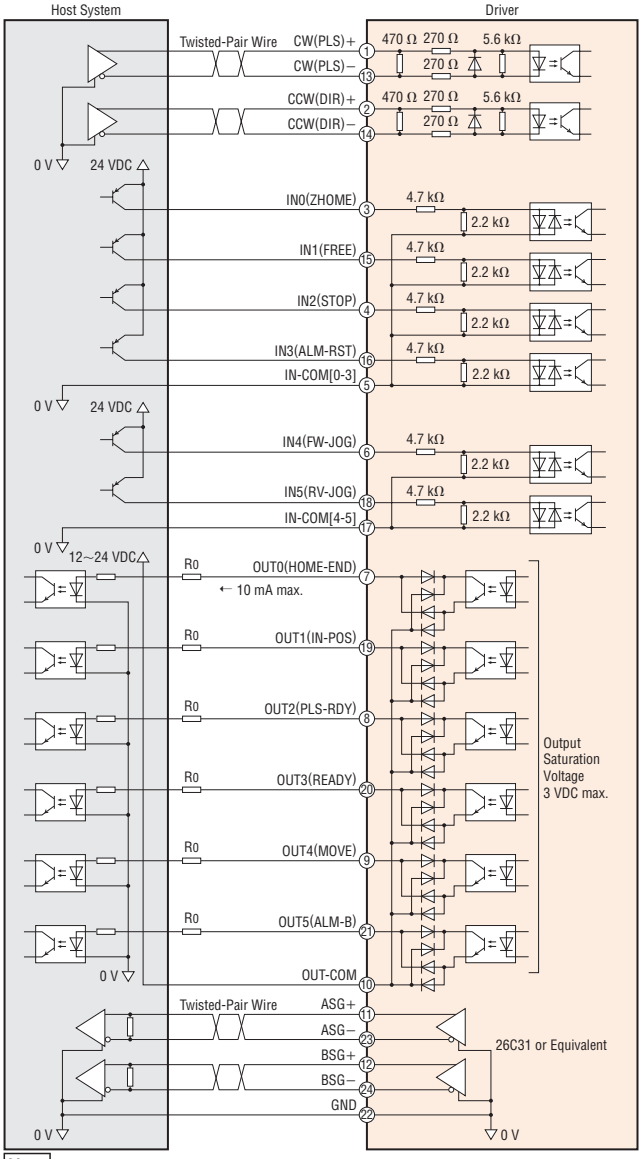

Note

- Use 24 VDC for the input signals.
- Use output signal at 12~24 VDC 10 mA or less. When the current value exceeds 10 mA, connect an external resistor R_0 to reduce the current to 10 mA or less.
- Provide a distance of 200 mm or more between the signal lines and power lines (power supply lines, motor lines). Do not run the signal lines in the same piping as power lines or bundle them with power lines.
- If noise generated by the motor cable or power supply cable causes a problem with the specific wiring or layout, shield the cable or use ferrite cores.

When the pulse input is open collector

• When the pulse input signal is 5 VDC

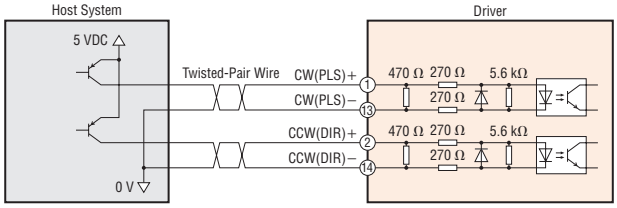

• When the pulse input signal is 24 VDC

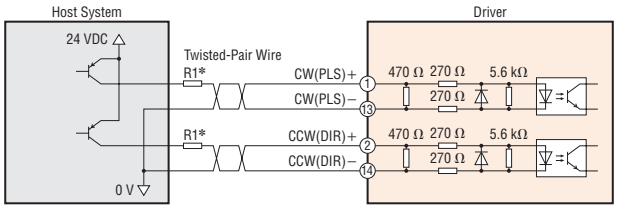

*R1: 1.2 kΩ~2.2 kΩ 0.5 W min.

Note

- Use 5~24 VDC for CW (PLS) input and CCW (DIR) input. If used at 24 VDC, connect external resistor R_1 (1.2 kΩ~2.2 kΩ 0.5 W min.)
- If used at 5 VDC, connect the pulse input signal directly without connecting an external resistor.

◇MECHATROLINK-Ⅲ compatible

•Diagram for Connection with Current Sink Output Circuit

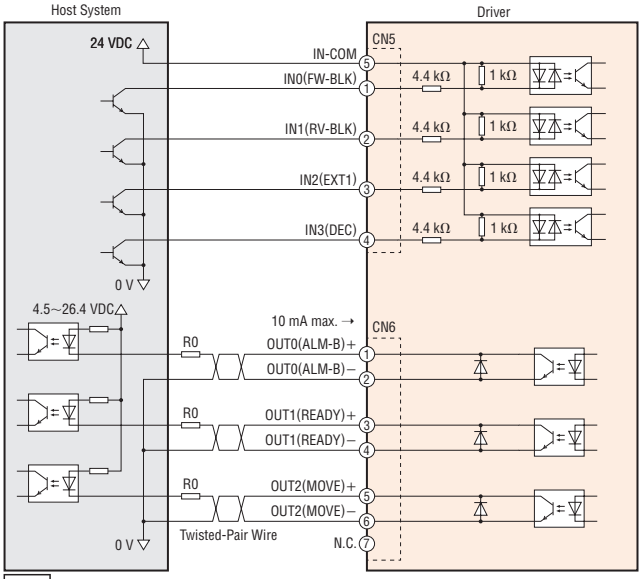

•Diagram for Connection with Current Source Output Circuit

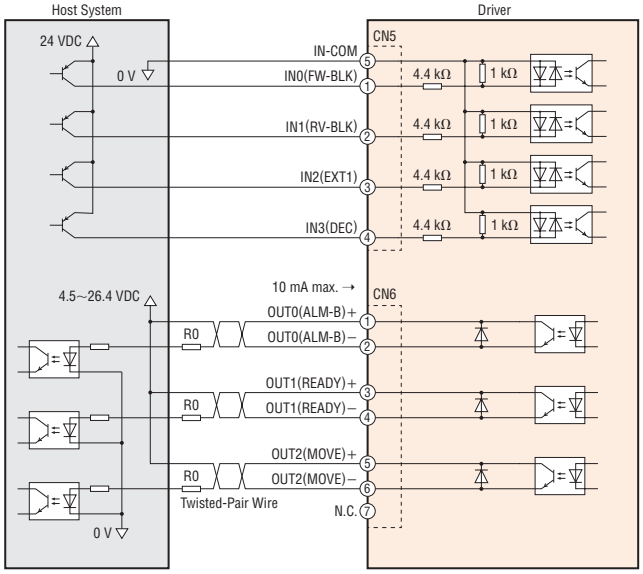

Note

- Use 24 VDC for the input signals.
- Use output signal at 4.5~26.4 VDC 10 mA or less. When the current value exceeds 10 mA, connect an external resistor R_0 to reduce the current to 10 mA or less.
- Provide a distance of 200 mm or more between the signal lines and power lines (power supply lines, motor lines).
  Do not run the signal lines in the same piping as power lines or bundle them with power lines.
- If noise generated by the motor cable or power supply cable causes a problem with the specific wiring or layout, shield the cable or use ferrite cores.

◇SSCNETⅢ/H compatible

•Diagram for Connection with Current Sink Output Circuit

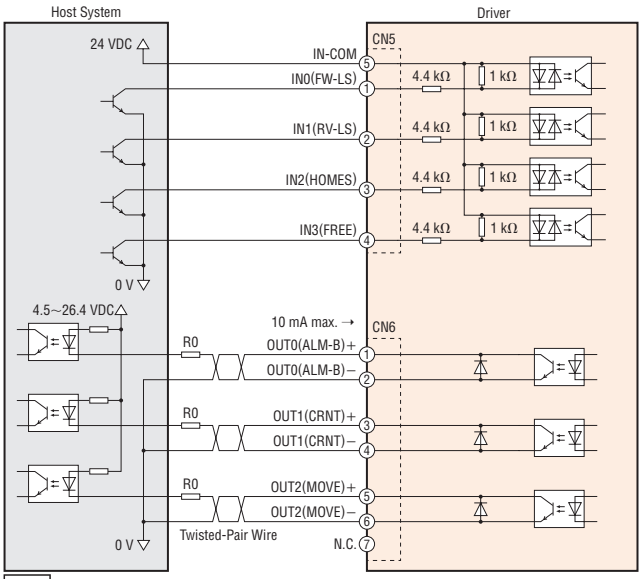

•Diagram for Connection with Current Source Output Circuit

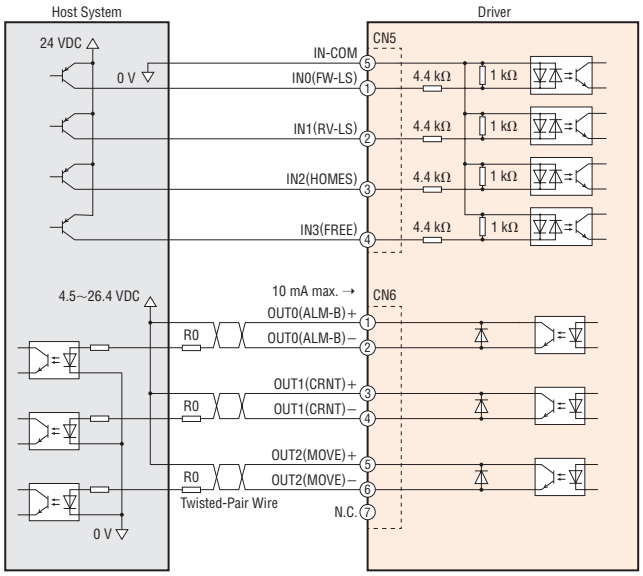

Note

- Use 24 VDC for the input signals.
- Use output signal at 4.5~26.4 VDC 10 mA or less. When the current value exceeds 10 mA, connect an external resistor R_0 to reduce the current to 10 mA or less.
- Provide a distance of 200 mm or more between the signal lines and power lines (power supply lines, motor lines).
  Do not run the signal lines in the same piping as power lines or bundle them with power lines.
- If noise generated by the motor cable or power supply cable causes a problem with the specific wiring or layout, shield the cable or use ferrite cores.

System Configuration

●Combination of Standard Type Motor with Electromagnetic Brake and Built-in Controller Type Driver or Pulse Input Type Driver with RS-485 Communication

An example of a configuration using RS-485 communication or I/O control with a built-in controller type driver is shown below.
Motors, drivers, and connection cable sets/flexible connection cable sets must be ordered individually.

◉Not supplied
○Please purchase as necessary

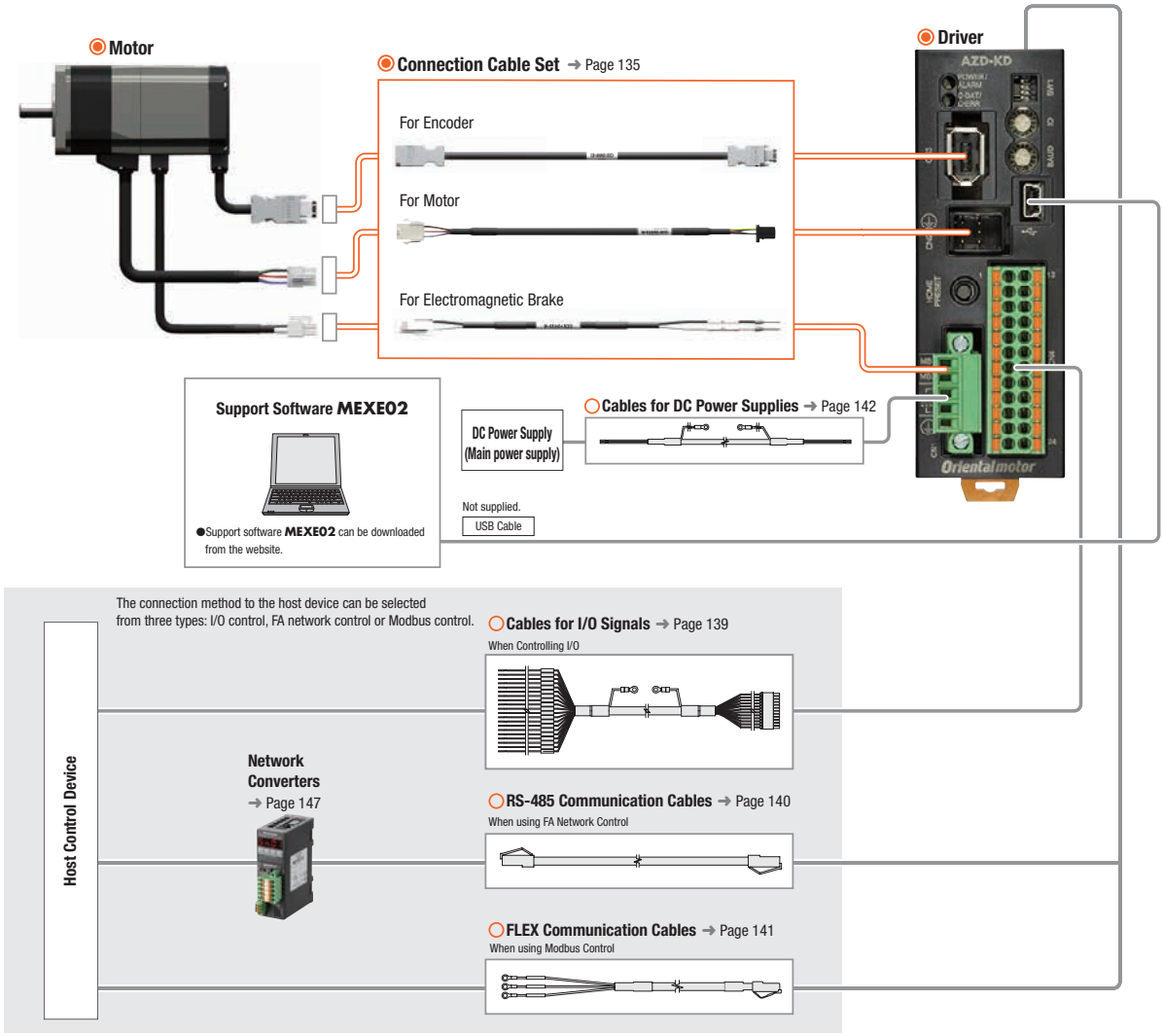

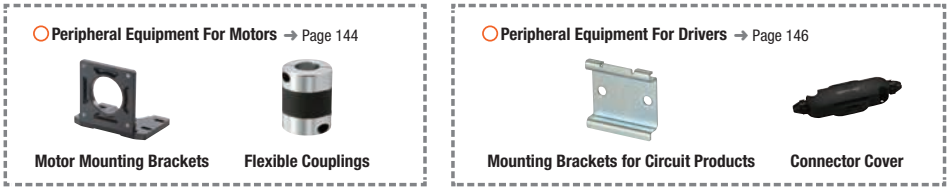

●Example of System Configuration

Motor		Driver		Cables			Peripheral Equipment		
				Connection Cable Set (1 m)	Cables for I/O Signals Connector Type (1 m)		Motor Mounting Brackets	Flexible Couplings	Mounting Brackets for Circuit Products
AZM66MK	+	AZD-KD	+	CC010VZFB2	CC24D010C-1	+	PALW2P-5	XGT2-25C-10-10	MAFP02
◉		◉		◉	○		○	○	○

● The system configuration shown above is an example. Other combinations are also available.

Note
● The motor cable and electromagnetic brake cable from the motor cannot be connected directly to the driver. When connecting to a driver, use a connection cable.

●Combination of Standard Type Motor with Electromagnetic Brake and Pulse Input Type Driver

An example of a single-axis system configuration with a programmable controller (equipped with pulse oscillation function) is shown below. Motors, drivers, and connection cable sets/flexible connection cable sets must be ordered individually.

◉Not supplied
○Please purchase as necessary

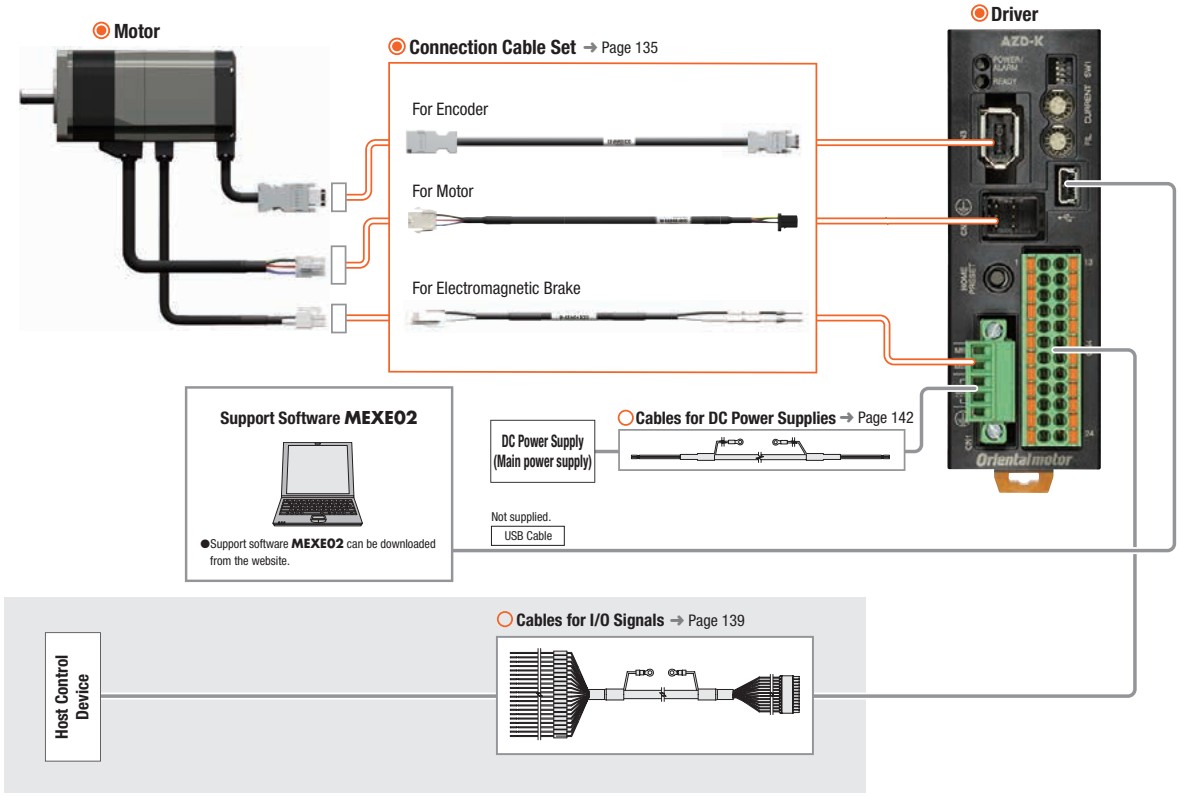

●Example of System Configuration

Motor		Driver		Cables			Peripheral Equipment		
				Connection Cable Set (1 m)	Cables for I/O Signals Connector Type (1 m)		Motor Mounting Brackets	Flexible Couplings	Mounting Brackets for Circuit Products
AZM66MK	+	AZD-K	+	CC010VZFB2	CC24D010C-1	+	PALW2P-5	XGT2-25C-10-10	MAFP02
◉		◉		◉	○		○	○	○

● The system configuration shown above is an example. Other combinations are also available.

Note

● The motor cable and electromagnetic brake cable from the motor cannot be connected directly to the driver. When connecting to a driver, use a connection cable.

●Combination of Standard Type Motor with Electromagnetic Brake and Network Compatible Driver

An example of a configuration using I/O control or EtherNet/IP with an EtherNet/IP compatible driver is shown below.
Motors, drivers, and connection cable sets/flexible connection cable sets must be ordered individually.

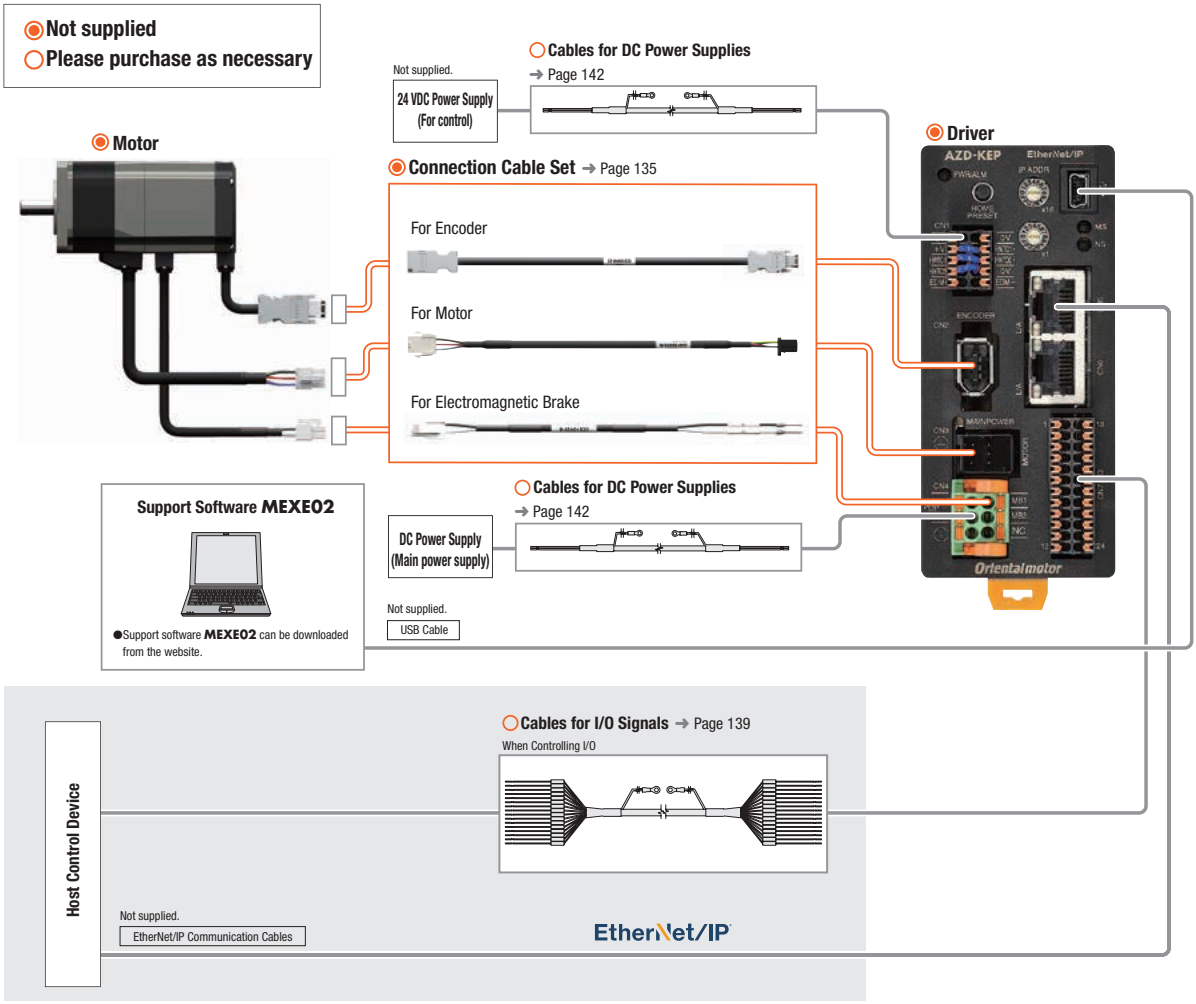

○Peripheral Equipment For Motors → Page 144

Motor Mounting Brackets

Flexible Couplings

○Peripheral Equipment For Drivers → Page 146

Mounting Brackets for Circuit Products

Connector Cover

●Example of System Configuration

Motor		Driver		Cables			Peripheral Equipment		
				Connection Cable Set (1 m)	General Purpose Cable Type for I/O Signals (1 m)		Motor Mounting Brackets	Flexible Couplings	Mounting Brackets for Circuit Products
AZM66MK	+	AZD-KEP	+	CC010VZFB2	CC16D010B-1	+	PALW2P-5	XGT2-25C-10-10	MAFP02
◉		◉		◉	○		○	○	○

● The system configuration shown above is an example. Other combinations are also available.

Note

● The motor cable and electromagnetic brake cable from the motor cannot be connected directly to the driver. When connecting to a driver, use a connection cable.

Product Number

Motor

◇Standard Type

AZM 6 6 A 0 K F

① ② ③ ④ ⑤ ⑥ ⑦

◇**PS**, **HPG**, Harmonic Geared Type

AZM 6 6 A K - HP 15 F

① ② ③ ④ ⑥ ⑧ ⑨ ⑩

①	Motor Type	**AZM**: **AZ** Series Motor
②	Motor Frame Size	**1**: 20 mm **2**: 28 mm (Harmonic geared type is 30 mm) **4**: 42 mm (**HPG** geared type is 40 mm) **6**: 60 mm
③	Motor Case Length	
④	Output Shaft Type	**A**: Single Shaft **M**: Type with Electromagnetic Brake
⑤	Additional Function*	**0**: Straight **1**: With Key
⑥	Motor Type	**K**: DC Input Specification
⑦	Motor Cable Configuration	**F**: Horizontal outlet
⑧	Geared Type	**PS**: **PS** Geared Type **HP**: **HPG** Geared Type **HS**: Harmonic Geared Type
⑨	Gear Ratio	
⑩	Output Shaft Type	**HPG** Geared Type Blank: Shaft Output **F**: Flange Output

*Standard type products without an additional function number have a round shaft with a flat.

◇**TS** Geared Type

AZM 6 6 A K - TS 7.2 U

① ② ③ ④ ⑤ ⑥ ⑦ ⑧

①	Motor Type	**AZM**: **AZ** Series Motor
②	Motor Frame Size	**4**: 42 mm **6**: 60 mm
③	Motor Case Length	
④	Output Shaft Type	**A**: Single Shaft **M**: Type with Electromagnetic Brake
⑤	Motor Type	**K**: DC Input Specification
⑥	Geared Type	**TS**: **TS** Geared Type
⑦	Gear Ratio	
⑧	Cable Outlet Direction	**U**: Up **L**: Left **R**: Right

◇**FC** Geared Type

AZM 6 6 A K - FC 7.2 U A

① ② ③ ④ ⑤ ⑥ ⑦ ⑧ ⑨

①	Motor Type	**AZM**: **AZ** Series Motor
②	Motor Frame Size	**4**: 42 mm **6**: 60 mm
③	Motor Case Length	
④	Output Shaft Type	**A**: Single Shaft **M**: Type with Electromagnetic Brake
⑤	Motor Type	**K**: DC Input Specification
⑥	Geared Type	**FC**: **FC** Geared Type
⑦	Gear Ratio	
⑧	Cable Outlet Direction*	**D**: Down **U**: Up
⑨	Identification	**A**: Solid Shaft

*The cable direction is as viewed from the gearhead with the output shaft facing left.

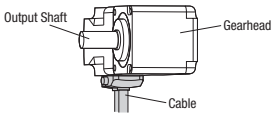

Cable Down

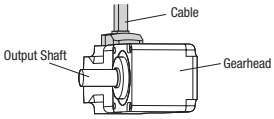

Cable Up

Driver

AZD - K D

① ② ③

①	Driver Type	**AZD**: **AZ** Series Driver
②	Power Supply Input	**K**: 24/48 VDC
③	Product Line	**D**: Built-in Controller Type **X**: Pulse Input Type with RS-485 Communication Blank: Pulse Input Type **EP**: EtherNet/IP compatible **ED**: EtherCAT Drive Profile compatible **PN**: PROFINET compatible

Connection Cable Sets/Flexible Connection Cable Sets

CC 050 V Z □ F B 2

① ② ③ ④ ⑤ ⑥ ⑦ ⑧

①		**CC**: Cable
②	Length	**005**: 0.5 m **010**: 1 m **015**: 1.5 m **020**: 2 m **025**: 2.5 m **030**: 3 m **040**: 4 m **050**: 5 m **070**: 7 m **100**: 10 m **150**: 15 m **200**: 20 m
③	Reference Number	
④	Applicable Model	**Z**: For **AZ** Series
⑤	Reference Number	Blank: Frame Size 42 mm (**HPG** Geared Type is 40 mm), 60 mm **2**: Frame Size 20 mm, 28 mm (Harmonic geared type is 30 mm)
⑥	Cable Type	**F**: Connection Cable Sets **R**: Flexible Connection Cable Sets
⑦	Description	Blank: Without Electromagnetic Brake **B**: With Electromagnetic Brake
⑧	Cable Specifications	**2**: For DC Input

Product Line

Motors, drivers, and connection cables must be ordered individually.

●Motor

◇Standard Type

Frame Size	Product Name
20 mm	AZM14AK AZM15AK
28 mm	AZM24AK AZM26AK
42 mm	AZM46AK AZM46A0K AZM46A0KF AZM48AK AZM48A0K AZM48A0KF AZM48A1K
60 mm	AZM66AK AZM66A0K AZM66A0KF AZM66A1K AZM69AK AZM69A0K AZM69A0KF AZM69A1K

◇Standard Type with Electromagnetic Brake

Frame Size	Product Name
42 mm	AZM46MK AZM46M0K AZM46M0KF
60 mm	AZM66MK AZM66M0K AZM66M0KF AZM66M1K AZM69MK AZM69M0K AZM69M0KF AZM69M1K

◇**TS** Geared Type

Frame Size	Product Name
42 mm	AZM46AK-TS3.6 AZM46AK-TS3.6R AZM46AK-TS3.6U AZM46AK-TS3.6L AZM46AK-TS7.2 AZM46AK-TS7.2R AZM46AK-TS7.2U AZM46AK-TS7.2L AZM46AK-TS10 AZM46AK-TS10R AZM46AK-TS10U AZM46AK-TS10L AZM46AK-TS20 AZM46AK-TS20R AZM46AK-TS20U AZM46AK-TS20L AZM46AK-TS30 AZM46AK-TS30R AZM46AK-TS30U AZM46AK-TS30L
60 mm	AZM66AK-TS3.6 AZM66AK-TS3.6R AZM66AK-TS3.6U AZM66AK-TS3.6L AZM66AK-TS7.2 AZM66AK-TS7.2R AZM66AK-TS7.2U AZM66AK-TS7.2L AZM66AK-TS10 AZM66AK-TS10R AZM66AK-TS10U AZM66AK-TS10L AZM66AK-TS20 AZM66AK-TS20R AZM66AK-TS20U AZM66AK-TS20L AZM66AK-TS30 AZM66AK-TS30R AZM66AK-TS30U AZM66AK-TS30L

◇**TS** Geared Type with Electromagnetic Brake

Frame Size	Product Name
42 mm	AZM46MK-TS3.6 AZM46MK-TS3.6R AZM46MK-TS3.6U AZM46MK-TS3.6L AZM46MK-TS7.2 AZM46MK-TS7.2R AZM46MK-TS7.2U AZM46MK-TS7.2L AZM46MK-TS10 AZM46MK-TS10R AZM46MK-TS10U AZM46MK-TS10L AZM46MK-TS20 AZM46MK-TS20R AZM46MK-TS20U AZM46MK-TS20L AZM46MK-TS30 AZM46MK-TS30R AZM46MK-TS30U AZM46MK-TS30L
60 mm	AZM66MK-TS3.6 AZM66MK-TS3.6R AZM66MK-TS3.6U AZM66MK-TS3.6L AZM66MK-TS7.2 AZM66MK-TS7.2R AZM66MK-TS7.2U AZM66MK-TS7.2L AZM66MK-TS10 AZM66MK-TS10R AZM66MK-TS10U AZM66MK-TS10L AZM66MK-TS20 AZM66MK-TS20R AZM66MK-TS20U AZM66MK-TS20L AZM66MK-TS30 AZM66MK-TS30R AZM66MK-TS30U AZM66MK-TS30L

◇**FC** Geared Type

Frame Size	Product Name
42 mm	**AZM46AK-FC7.2UA** **AZM46AK-FC7.2DA** **AZM46AK-FC10UA** **AZM46AK-FC10DA** **AZM46AK-FC20UA** **AZM46AK-FC20DA** **AZM46AK-FC30UA** **AZM46AK-FC30DA**
60 mm	**AZM66AK-FC7.2UA** **AZM66AK-FC7.2DA** **AZM66AK-FC10UA** **AZM66AK-FC10DA** **AZM66AK-FC20UA** **AZM66AK-FC20DA** **AZM66AK-FC30UA** **AZM66AK-FC30DA**

◇**PS** Geared Type

Frame Size	Product Name
28 mm	**AZM24AK-PS7.2** **AZM24AK-PS10**
42 mm	**AZM46AK-PS5** **AZM46AK-PS7.2** **AZM46AK-PS10** **AZM46AK-PS25** **AZM46AK-PS36** **AZM46AK-PS50**
60 mm	**AZM66AK-PS5** **AZM66AK-PS7.2** **AZM66AK-PS10** **AZM66AK-PS25** **AZM66AK-PS36** **AZM66AK-PS50**

◇**HPG** Geared Type

Frame Size	Product Name
40 mm	**AZM46AK-HP5** **AZM46AK-HP5F** **AZM46AK-HP9** **AZM46AK-HP9F**
60 mm	**AZM66AK-HP5** **AZM66AK-HP5F** **AZM66AK-HP15** **AZM66AK-HP15F**

◇Harmonic Geared Type

Frame Size	Product Name
30 mm	**AZM24AK-HS50** **AZM24AK-HS100**
42 mm	**AZM46AK-HS50** **AZM46AK-HS100**
60 mm	**AZM66AK-HS50** **AZM66AK-HS100**

◇**FC** Geared Type with Electromagnetic Brake

Frame Size	Product Name
42 mm	**AZM46MK-FC7.2UA** **AZM46MK-FC7.2DA** **AZM46MK-FC10UA** **AZM46MK-FC10DA** **AZM46MK-FC20UA** **AZM46MK-FC20DA** **AZM46MK-FC30UA** **AZM46MK-FC30DA**
60 mm	**AZM66MK-FC7.2UA** **AZM66MK-FC7.2DA** **AZM66MK-FC10UA** **AZM66MK-FC10DA** **AZM66MK-FC20UA** **AZM66MK-FC20DA** **AZM66MK-FC30UA** **AZM66MK-FC30DA**

◇**PS** Geared Type with Electromagnetic Brake

Frame Size	Product Name
42 mm	**AZM46MK-PS5** **AZM46MK-PS7.2** **AZM46MK-PS10** **AZM46MK-PS25** **AZM46MK-PS36** **AZM46MK-PS50**
60 mm	**AZM66MK-PS5** **AZM66MK-PS7.2** **AZM66MK-PS10** **AZM66MK-PS25** **AZM66MK-PS36** **AZM66MK-PS50**

◇ **HPG** Geared Type with Electromagnetic Brake

Frame Size	Product Name
40 mm	**AZM46MK-HP5** **AZM46MK-HP5F** **AZM46MK-HP9** **AZM46MK-HP9F**
60 mm	**AZM66MK-HP5** **AZM66MK-HP5F** **AZM66MK-HP15** **AZM66MK-HP15F**

◇Harmonic Geared Type with an Electromagnetic Brake

Frame Size	Product Name
42 mm	**AZM46MK-HS50** **AZM46MK-HS100**
60 mm	**AZM66MK-HS50** **AZM66MK-HS100**

●Driver

◇Built-in Controller Type

Power Supply Input	Product Name
24/48 VDC	**AZD-KD**

◇Pulse Input Type with RS-485 Communication

Power Supply Input	Product Name
24/48 VDC	**AZD-KX**

◇Pulse Input Type

Power Supply Input	Product Name
24/48 VDC	**AZD-K**

◇EtherNet/IP compatible

Power Supply Input	Product Name
24/48 VDC	**AZD-KEP**

◇EtherCAT Drive Profile compatible

Power Supply Input	Product Name
24/48 VDC	**AZD-KED**

◇PROFINET compatible

Power Supply Input	Product Name
24/48 VDC	**AZD-KPN**

●Connection Cable Sets/Flexible Connection Cable Sets

Use the flexible connection cable set in applications where the cable is bent and flexed. Extension cables and flexible extension cables are also available. Refer to page 135.

■Included Items

●Motor

Type \ Included Items		Parallel Key	Motor Installation Screw
Standard Type	Round Shaft with Flat	–	–
	Straight Type	–	–
	With Key	1 Piece	–
TS Geared Type	Frame Size 42 mm	–	–
	Frame Size 60 mm	1 Piece	M4×60 P0.7 (4 screws)
FC Geared Type		1 Piece	–
PS Geared Type	Frame Size 28 mm	–	–
	Frame Size 42 mm, 60 mm	1 Piece	–
HPG Geared Type	Shaft Output	1 Piece	–
	Flange Output	–	–
Harmonic Geared Type	Frame Size 30 mm	–	–
	Frame Size 42 mm, 60 mm	1 Piece	–

●Driver

Type \ Included Items	Connector
Built-in Controller Type Pulse Input Type with RS-485 Communication Pulse Input Type	For CN1 (1 piece) For CN4 (1 piece)
EtherNet/IP compatible EtherCAT Drive Profile compatible PROFINET compatible	For CN1 (1 piece) For CN4 (1 piece) For CN7 (1 piece)

List of Combinations

Product Line	Type	Product Name
Motor	Standard Type	**AZM14AK**, **AZM15AK** **AZM24AK**, **AZM26AK** **AZM46**□□**K**□, **AZM48A**□**K**□ **AZM66**□□**K**□, **AZM69**□□**K**□
	TS Geared Type	**AZM46**□**K-TS**□■ **AZM66**□**K-TS**□■
	FC Geared Type	**AZM46**□**K-FC**□■**A** **AZM66**□**K-FC**□■**A**
	PS Geared Type	**AZM24AK-PS**□ **AZM46**□**K-PS**□ **AZM66**□**K-PS**□
	HPG Geared Type	**AZM46**□**K-HP**□□ **AZM66**□**K-HP**□□
	Harmonic Geared Type	**AZM24AK-HS**□ **AZM46**□**K-HS**□ **AZM66**□**K-HS**□

＋

Product Line	Type	Product Name
Driver	Built-in Controller Type	**AZD-KD**
	Pulse Input Type with RS-485 Communication	**AZD-KX**
	Pulse Input Type	**AZD-K**
	EtherNet/IP compatible	**AZD-KEP**
	EtherCAT Drive Profile compatible	**AZD-KED**
	PROFINET compatible	**AZD-KPN**

＋

Product Line	Type		Product Name
Connection Cable Sets/ Flexible Connection Cable Sets	For **AZM14**, **AZM15**, **AZM24**, **AZM26**	Connection Cable Set	**CC**◇◇◇**VZ2F2**
		Flexible Connection Cable Sets	**CC**◇◇◇**VZ2R2**
	For **AZM46**, **AZM48**, **AZM66**, **AZM69**	Connection Cable Set	For Motor/Encoder: **CC**◇◇◇**VZF2** For Motor/Encoder/Electromagnetic Brake: **CC**◇◇◇**VZFB2**
		Flexible Connection Cable Sets	For Motor/Encoder: **CC**◇◇◇**VZR2** For Motor/Encoder/Electromagnetic Brake: **CC**◇◇◇**VZRB2**

● A letter or number indicating the following types is specified where the symbol is located in the product name.
□: Output Shaft Configuration
□: Additional Function
□: Motor Cable Configuration
□: Gear Ratio
■: Cable Outlet Direction
□: Output Shaft Type
◇: Cable Length

Standard Type Frame Size 20 mm, 28 mm

Specifications

Motor Product Name	Single Shaft	AZM14AK	AZM15AK	AZM24AK	AZM26AK
Driver Product Name		AZD-K■			
Max. Holding Torque	N·m	0.02	0.036	0.095	0.19
Holding Torque at Motor Standstill	N·m	0.01	0.018	0.047	0.095
Rotor Inertia	J: kg·m^2	2.7×10^{-7}	3.9×10^{-7}	9.2×10^{-7}	17×10^{-7}
Resolution	Resolution setting: 1000 P/R	0.36°/Pulse			
Power Supply Input		Check "■Driver Specifications" on page 95 for the driver current when combined with a motor.			
Control Power Supply*1					

● A letter indicating the driver type is specified where the box ■ is located in the product name. Check "■List of Combinations" on page 83 for driver product names.

*1 Excluding **AZD-KD**, **AZD-KX**, and **AZD-K**

*2 Excluding the motor

Speed – Torque Characteristics (Reference values)

AZM14

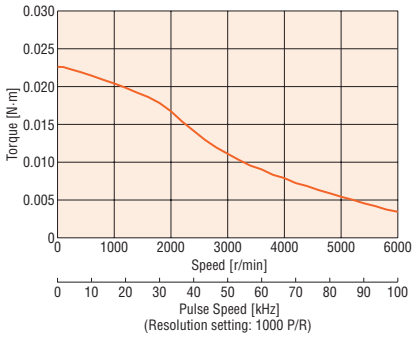

AZM15

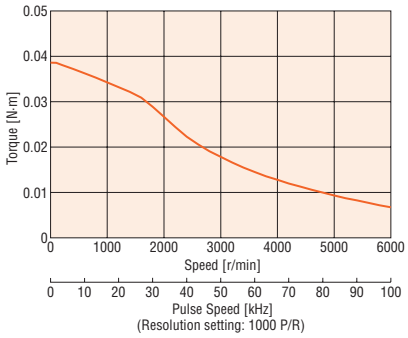

AZM24

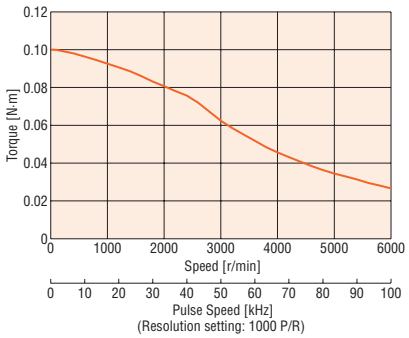

AZM26

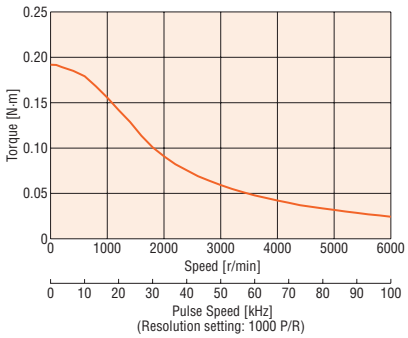

Note

● Data for the speed – torque characteristics is based on Oriental Motor's internal measurement conditions. If the conditions are changed, the characteristics may also change as a result.

● Depending on the driving conditions, a considerable amount of heat may be generated by the motor. To protect the absolute sensor, be sure to keep the temperature of the motor case at 80°C or less.

Explanation of Terminology in Specifications Table

Max. holding torque		: This is the max. holding torque (holding force) the motor has when power is supplied (at rated current) but the motor is not rotating. (With geared types, the value of holding torque considers the permissible strength of the gear.)
Permissible torque		: This is the max. value of the torque continuously applied to the output gear shaft.
Max. instantaneous torque		: This is the max. torque that can be applied to the output gear shaft during acceleration/deceleration such when an inertial load is started and stopped.
Holding torque at motor standstill	While power is on	: This is the holding torque when the automatic current cutback function is active.
	Electromagnetic brake	: This is the static friction torque when the electromagnetic brake is activated at standstill. (Electromagnetic brake is power off activated type.)

Standard Type Frame Size 42 mm, 60 mm

Specifications

Motor Product Name	Single Shaft	AZM46A□K□	AZM48A□K□	AZM66A□K□	AZM69A□K□
	With Electromagnetic Brake	AZM46M□K□	–	AZM66M□K□	AZM69M□K□
Driver Product Name		AZD-K■			
Max. Holding Torque	N·m	0.3	0.72	1	2
Holding Torque at Motor Standstill	Power ON N·m	0.15	0.36	0.5	1
	Electromagnetic Brake N·m	0.15	–	0.5	1
Rotor Inertia	J: kg·m^2	55×10^{-7} (71×10^{-7})*1	115×10^{-7}	370×10^{-7} (530×10^{-7})*1	740×10^{-7} (900×10^{-7})*1
Resolution	Resolution setting: 1000 P/R	0.36°/Pulse			
Power Supply Input		Check "■Driver Specifications" on page 95 for the driver current when combined with a motor.			
Control Power Supply*2					

- Either **0** (Straight) or **1** (With key) indicating the additional function is specified where the box □ is located in the product name. (**AZM46** is straight only)
  For round shaft with a flat, there is no character in the box □.
  If the motor cable configuration is horizontal outlet, an **F** is specified where the box ■ is located in the product name.
  A letter indicating the driver type is specified where the box ■ is located in the product name. Check "■ List of Combinations" on page 83 for driver product names.
- When the motor is operated from 48 VDC input, as a reference, use an inertial load 10 times the rotor inertial ratio or less and twice the safety factor or more when calculating the acceleration torque (excluding **AZM46**).

*1 The value inside the ( ) represents the value when connecting an electromagnetic brake motor.
*2 Excluding **AZD-KD**, **AZD-KX**, and **AZD-K**

Speed – Torque Characteristics (Reference values)

AZM46

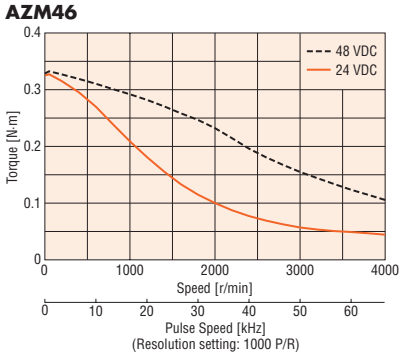

AZM48

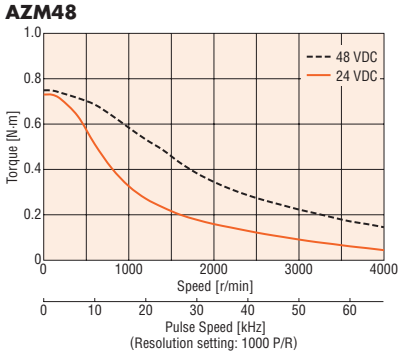

AZM66

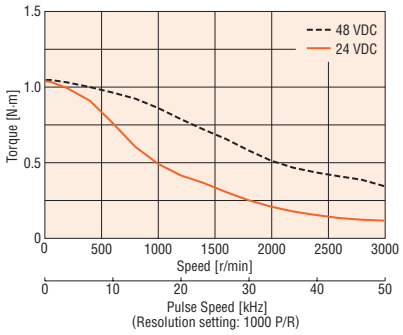

AZM69

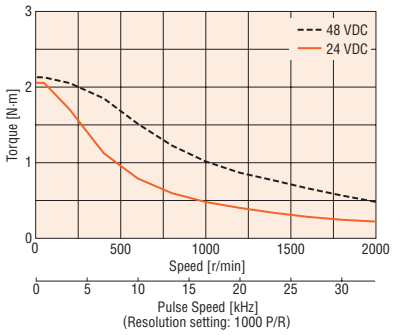

Note

- Data for the speed – torque characteristics is based on Oriental Motor's internal measurement conditions. If the conditions are changed, the characteristics may also change as a result.
- Depending on the driving conditions, a considerable amount of heat may be generated by the motor. To protect the absolute sensor, be sure to keep the temperature of the motor case at 80°C or less. (When conforming to the UL or CSA Standards, the temperature of the motor case must be kept at 75°C or less since the motor is recognized as heat-resistant class A.)

TS Geared Type Frame Size 42 mm

Specifications

Motor Product Name	Single Shaft	AZM46AK-TS3.6□	AZM46AK-TS7.2□	AZM46AK-TS10□	AZM46AK-TS20□	AZM46AK-TS30□
	With Electromagnetic Brake	AZM46MK-TS3.6□	AZM46MK-TS7.2□	AZM46MK-TS10□	AZM46MK-TS20□	AZM46MK-TS30□
Driver Product Name		AZD-K■				
Max. Holding Torque	N·m	0.65	1.2	1.7	2	2.3
Rotor Inertia	J: kg·m^2	55×10^{-7} (71×10^{-7})*1				
Gear Ratio		3.6	7.2	10	20	30
Resolution	Resolution setting: 1000 P/R	0.1°/Pulse	0.05°/Pulse	0.036°/Pulse	0.018°/Pulse	0.012°/Pulse
Permissible Torque	N·m	0.65	1.2	1.7	2	2.3
Max. Instantaneous Torque*	N·m	0.85	1.6	2	*	3
Holding Torque at Motor Standstill	Power ON N·m	0.54	1	1.5	1.8	2.3
	Electromagnetic Brake N·m	0.54	1	1.5	1.8	2.3
Speed Range	r/min	0~833	0~416	0~300	0~150	0~100
Backlash	arcmin	45 (0.75°)	25 (0.42°)		15 (0.25°)	
Power Supply Input		Check "■Driver Specifications" on page 95 for the driver current when combined with a motor.				
Control Power Supply*2						

- Either **R** (Right), **U** (Up), or **L** (Left) indicating the cable outlet direction is specified where the box □ is located in the product name. For down, there is no character in the box □.
  A letter indicating the driver type is specified where the box ■ is located in the product name. Check "■ List of Combinations" on page 83 for driver product names.

* For the geared motor output torque, refer to the speed–torque characteristics.

*1 The value inside the ( ) represents the value when connecting an electromagnetic brake motor.

*2 Excluding **AZD-KD**, **AZD-KX**, and **AZD-K**

Speed – Torque Characteristics (Reference values)

AZM46 Gear Ratio **3.6**

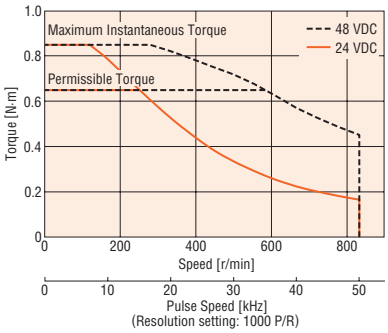

AZM46 Gear Ratio **7.2**

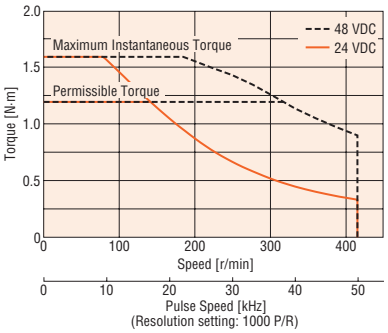

AZM46 Gear Ratio **10**

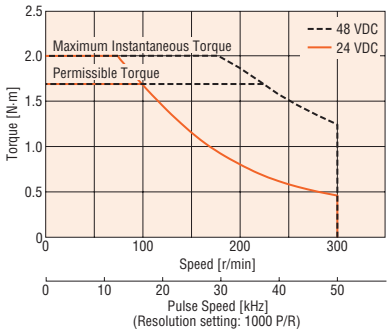

AZM46 Gear Ratio **20**

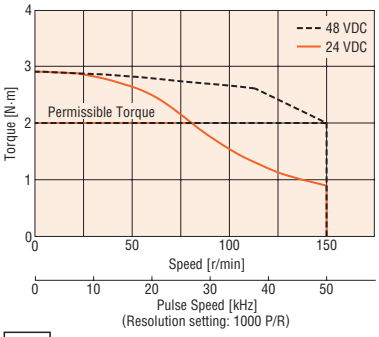

AZM46 Gear Ratio **30**

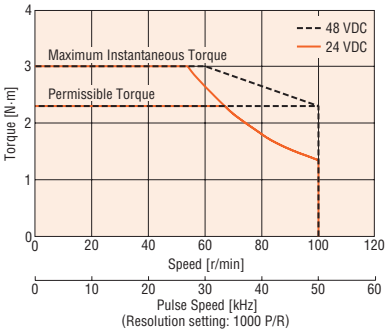

Note

- Data for the speed – torque characteristics is based on Oriental Motor's internal measurement conditions. If the conditions are changed, the characteristics may also change as a result.
- Depending on the driving conditions, a considerable amount of heat may be generated by the motor. To protect the absolute sensor, be sure to keep the temperature of the motor case at 80°C or less. (When conforming to the UL or CSA Standards, the temperature of the motor case must be kept at 75°C or less since the motor is recognized as heat-resistant class A.)

TS Geared Type Frame Size 60 mm

Specifications

Motor Product Name	Single Shaft	AZM66AK-TS3.6□	AZM66AK-TS7.2□	AZM66AK-TS10□	AZM66AK-TS20□	AZM66AK-TS30□
	With Electromagnetic Brake	AZM66MK-TS3.6□	AZM66MK-TS7.2□	AZM66MK-TS10□	AZM66MK-TS20□	AZM66MK-TS30□
Driver Product Name		AZD-K■				
Max. Holding Torque	N·m	1.8	3	4	5	6
Rotor Inertia	J: kg·m^2	370×10^{-7} (530×10^{-7})*1				
Gear Ratio		3.6	7.2	10	20	30
Resolution	Resolution setting: 1000 P/R	0.1°/Pulse	0.05°/Pulse	0.036°/Pulse	0.018°/Pulse	0.012°/Pulse
Permissible Torque	N·m	1.8	3	4	5	6
Max. Instantaneous Torque*	N·m	*	*	*	8	10
Holding Torque at Motor Standstill	Power ON N·m	1.1	2.2	3	5	6
	Electromagnetic Brake N·m	1.1	2.2	3	5	6
Speed Range	r/min	0~833	0~416	0~300	0~150	0~100
Backlash	arcmin	35 (0.59°)	15 (0.25°)		10 (0.17°)	
Power Supply Input		Check "■Driver Specifications" on page 95 for the driver current when combined with a motor.				
Control Power Supply*2						

- Either **R** (Right), **U** (Up), or **L** (Left) indicating the cable outlet direction is specified where the box □ is located in the product name. For down, there is no character in the box □.
  A letter indicating the driver type is specified where the box ■ is located in the product name. Check "■List of Combinations" on page 83 for driver product names.
- When the motor is operated from 48 VDC input, as a reference, use an inertial load 10 times the rotor inertial ratio or less and twice the safety factor or more when calculating the acceleration torque.

* For the geared motor output torque, refer to the speed–torque characteristics.

*1 The value inside the ( ) represents the value when connecting an electromagnetic brake motor.

*2 Excluding **AZD-KD**, **AZD-KX**, and **AZD-K**

Speed – Torque Characteristics (Reference values)

AZM66 Gear Ratio **3.6**

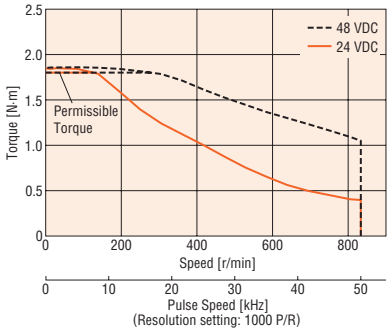

AZM66 Gear Ratio **7.2**

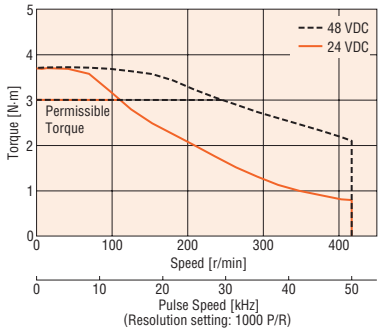

AZM66 Gear Ratio **10**

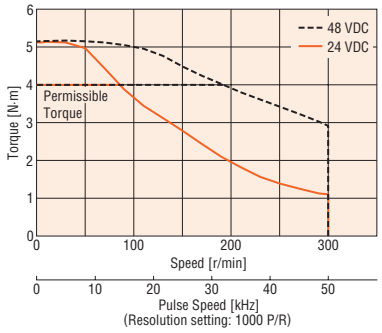

AZM66 Gear Ratio **20**

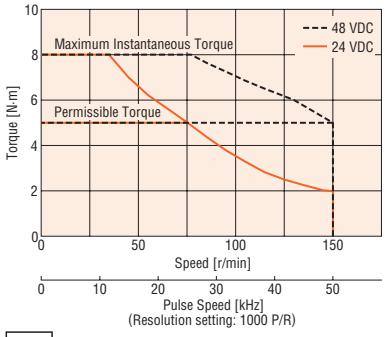

AZM66 Gear Ratio **30**

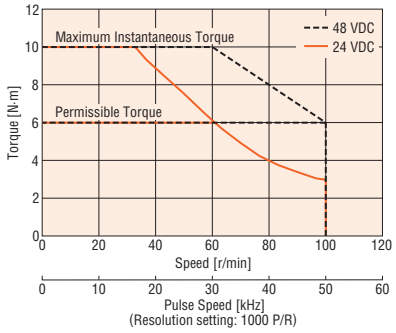

Note

- Data for the speed – torque characteristics is based on Oriental Motor's internal measurement conditions. If the conditions are changed, the characteristics may also change as a result.
- Depending on the driving conditions, a considerable amount of heat may be generated by the motor. To protect the absolute sensor, be sure to keep the temperature of the motor case at 80°C or less. (When conforming to the UL or CSA Standards, the temperature of the motor case must be kept at 75°C or less since the motor is recognized as heat-resistant class A.)

FC Geared Type Frame Size 42 mm

Specifications

Motor Product Name	Single Shaft	AZM46AK-FC7.2□A	AZM46AK-FC10□A	AZM46AK-FC20□A	AZM46AK-FC30□A
	With Electromagnetic Brake	AZM46MK-FC7.2□A	AZM46MK-FC10□A	AZM46MK-FC20□A	AZM46MK-FC30□A
Driver Product Name		AZD-K■			
Max. Holding Torque	N·m	0.7	1	2	3
Rotor Inertia	J: kg·m^2	55×10^{-7} (71×10^{-7})*1			
Gear Ratio		7.2	10	20	30
Resolution	Resolution setting: 1000 P/R	0.05°/Pulse	0.036°/Pulse	0.018°/Pulse	0.012°/Pulse
Permissible Torque		0.7	1	2	3
Holding Torque at Motor Standstill	Power ON N·m	0.7	1	2	3
	Electromagnetic Brake N·m	0.7	1	2	3
Speed Range	r/min	0~416	0~300	0~150	0~100
Backlash	arcmin	25 (0.42°)		15 (0.25°)	
Power Supply Input		Check "■Driver Specifications" on page 95 for the driver current when combined with a motor.			
Control Power Supply*2					

● Either **U** (Up) or **D** (Down) indicating the cable outlet direction is specified where the box □ is located in the product name.
A letter indicating the driver type is specified where the box ■ is located in the product name. Check "■List of Combinations" on page 83 for driver product names.
*1 The value inside the ( ) represents the value when connecting an electromagnetic brake motor.
*2 Excluding **AZD-KD**, **AZD-KX**, and **AZD-K**

Speed – Torque Characteristics (Reference values)

AZM46 Gear Ratio **7.2**

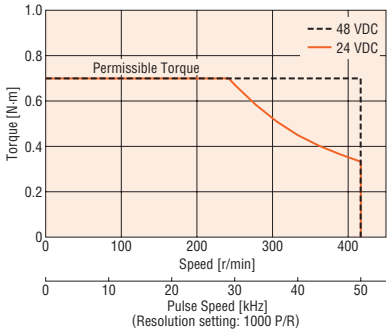

AZM46 Gear Ratio **10**

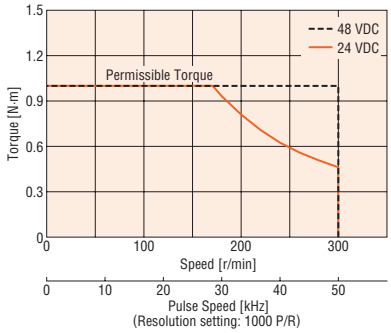

AZM46 Gear Ratio **20**

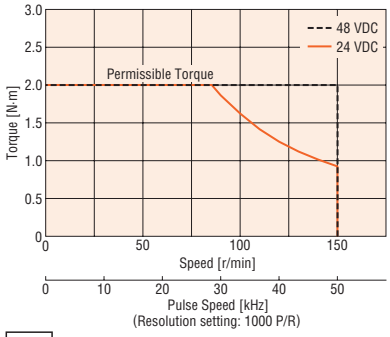

AZM46 Gear Ratio **30**

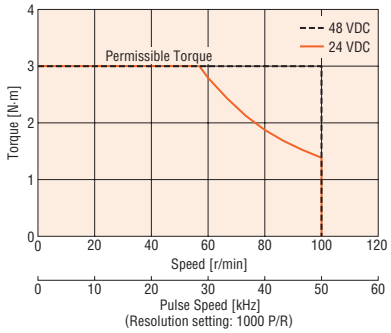

Note

● Data for the speed – torque characteristics is based on Oriental Motor's internal measurement conditions. If the conditions are changed, the characteristics may also change as a result.
● Depending on the driving conditions, a considerable amount of heat may be generated by the motor. To protect the absolute sensor, be sure to keep the temperature of the motor case at 80°C or less.
(When conforming to the UL or CSA Standards, the temperature of the motor case must be kept at 75°C or less since the motor is recognized as heat-resistant class A.)

FC Geared Type Frame Size 60 mm

Specifications

Motor Product Name	Single Shaft	AZM66AK-FC7.2□A	AZM66AK-FC10□A	AZM66AK-FC20□A	AZM66AK-FC30□A
	With Electromagnetic Brake	AZM66MK-FC7.2□A	AZM66MK-FC10□A	AZM66MK-FC20□A	AZM66MK-FC30□A
Driver Product Name		AZD-K■			
Max. Holding Torque	N·m	2.5	3.5	7	10.5
Rotor Inertia	J: kg·m^2	370×10^{-7} (530×10^{-7})*1			
Gear Ratio		7.2	10	20	30
Resolution	Resolution setting: 1000 P/R	0.05°/Pulse	0.036°/Pulse	0.018°/Pulse	0.012°/Pulse
Permissible Torque		2.5	3.5	7	10.5
Holding Torque at Motor Standstill	Power ON N·m	2.5	3.5	7	10.5
	Electromagnetic Brake N·m	2.5	3.5	7	10.5
Permissible Speed Range	r/min	0~416	0~300	0~150	0~100
Backlash	arcmin	15 (0.25°)		10 (0.17°)	
Power Supply Input		Check "■Driver Specifications" on page 95 for the driver current when combined with a motor.			
Control Power Supply*2					

- Either **U** (Up) or **D** (Down) indicating the cable outlet direction is specified where the box □ is located in the product name.
  A letter indicating the driver type is specified where the box ■ is located in the product name. Check "■List of Combinations" on page 83 for driver product names.
- When the motor is operated from 48 VDC input, as a reference, use an inertial load 10 times the rotor inertial ratio or less and twice the safety factor or more when calculating the acceleration torque.

*1 The value inside the ( ) represents the value when connecting an electromagnetic brake motor.
*2 Excluding **AZD-KD**, **AZD-KX**, and **AZD-K**

Speed – Torque Characteristics (Reference values)

AZM66 Gear Ratio **7.2**

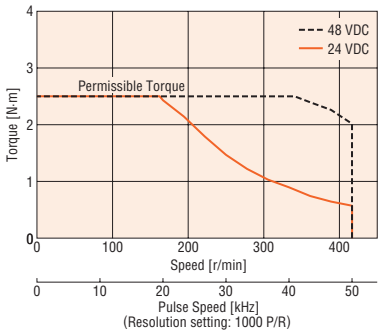

AZM66 Gear Ratio **10**

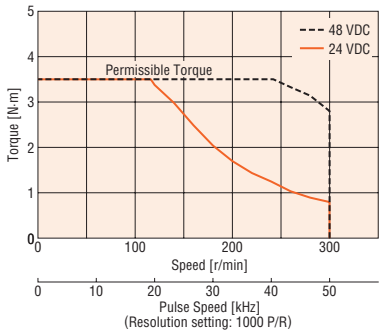

AZM66 Gear Ratio **20**

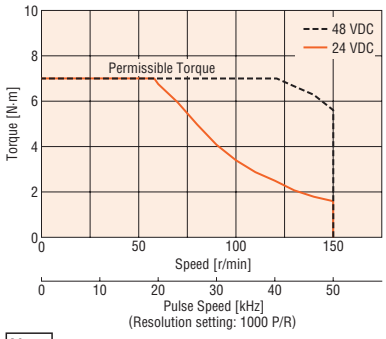

AZM66 Gear Ratio **30**

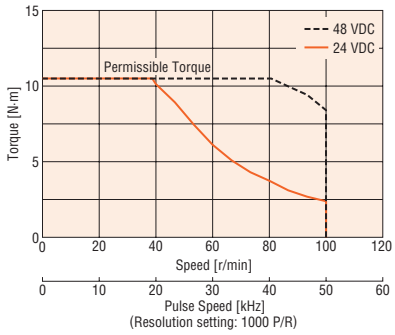

Note

- Data for the speed – torque characteristics is based on Oriental Motor's internal measurement conditions. If the conditions are changed, the characteristics may also change as a result.
- Depending on the driving conditions, a considerable amount of heat may be generated by the motor. To protect the absolute sensor, be sure to keep the temperature of the motor case at 80°C or less. (When conforming to the UL or CSA Standards, the temperature of the motor case must be kept at 75°C or less since the motor is recognized as heat-resistant class A.)

PS Geared Type Frame Size 28 mm

Specifications

Motor Product Name	Single Shaft	AZM24AK-PS7.2	AZM24AK-PS10
Driver Product Name		AZD-K■	
Max. Holding Torque	N·m	0.3	0.5
Rotor Inertia	J: kg·m^2	9.2×10^{-7}	
Gear Ratio		7.2	10
Resolution	Resolution setting: 1000 P/R	0.05°/Pulse	0.036°/Pulse
Permissible Torque	N·m	0.3	0.5
Max. Instantaneous Torque*	N·m	*	–
Holding Torque at Motor Standstill	N·m	0.2	0.27
Permissible Speed Range	r/min	0～416	0～300
Backlash	arcmin	35 (0.59°)	
Power Supply Input		Check "■Driver Specifications" on page 95 for the driver current when combined with a motor.	
Control Power Supply*2			

● A letter indicating the driver type is specified where the box ■ is located in the product name. Check "■ List of Combinations" on page 83 for driver product names.

* For the geared motor output torque, refer to the speed–torque characteristics.

*1 Excluding **AZD-KD**, **AZD-KX**, and **AZD-K**

*2 Excluding the motor

Speed – Torque Characteristics (Reference values)

AZM24 Gear Ratio **7.2**

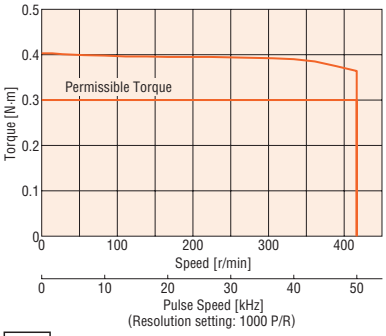

AZM24 Gear Ratio **10**

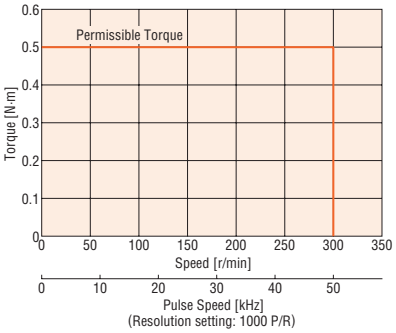

Note

● Data for the speed – torque characteristics is based on Oriental Motor's internal measurement conditions. If the conditions are changed, the characteristics may also change as a result.

● Depending on the driving conditions, a considerable amount of heat may be generated by the motor. To protect the absolute sensor, be sure to keep the temperature of the motor case at 80°C or less.

PS Geared Type Frame Size 42 mm

Specifications

Motor Product Name	Single Shaft	AZM46AK-PS5	AZM46AK-PS7.2	AZM46AK-PS10	AZM46AK-PS25	AZM46AK-PS36	AZM46AK-PS50
	With Electromagnetic Brake	AZM46MK-PS5	AZM46MK-PS7.2	AZM46MK-PS10	AZM46MK-PS25	AZM46MK-PS36	AZM46MK-PS50
Driver Product Name		AZD-K■					
Max. Holding Torque	N·m	1	1.5		2.5	3	
Rotor Inertia	J: kg·m^2	55×10^{-7} (71×10^{-7})✻1					
Gear Ratio		5	7.2	10	25	36	50
Resolution	Resolution setting: 1000 P/R	0.072°/Pulse	0.05°/Pulse	0.036°/Pulse	0.0144°/Pulse	0.01°/Pulse	0.0072°/Pulse
Permissible Torque	N·m	1	1.5		2.5	3	
Max. Instantaneous Torque✻	N·m	✻	2		6	✻	6
Holding Torque at Motor Standstill	Power ON N·m	0.75	1	1.5	2.5	3	
	Electromagnetic Brake N·m	0.75	1	1.5	2.5	3	
Permissible Speed Range	r/min	0~600	0~416	0~300	0~120	0~83	0~60
Backlash	arcmin	15 (0.25°)					
Power Supply Input		Check "■Driver Specifications" on page 95 for the driver current when combined with a motor.					
Control Power Supply✻2							

● A letter indicating the driver type is specified where the box ■ is located in the product name. Check "■ List of Combinations" on page 83 for driver product names.

✻ For the geared motor output torque, refer to the speed–torque characteristics.

✻1 The value inside the ( ) represents the value when connecting an electromagnetic brake motor.

✻2 Excluding **AZD-KD**, **AZD-KX**, and **AZD-K**

Speed – Torque Characteristics (Reference values)

AZM46 Gear Ratio **5**

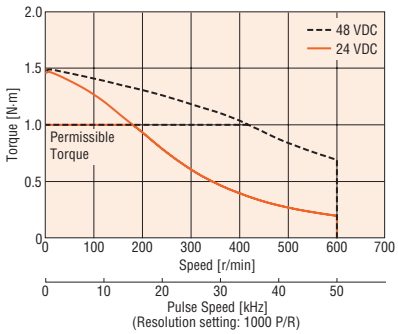

AZM46 Gear Ratio **7.2**

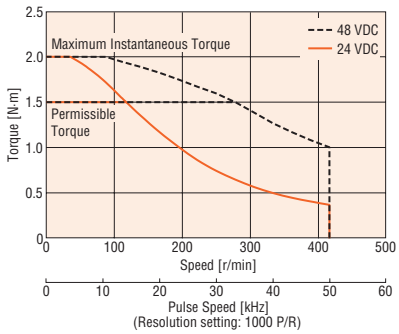

AZM46 Gear Ratio **10**

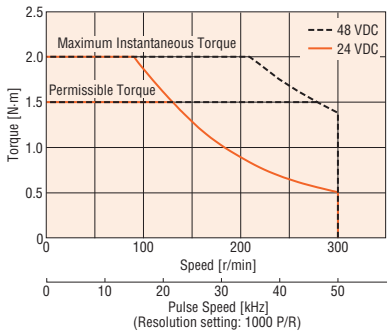

AZM46 Gear Ratio **25**

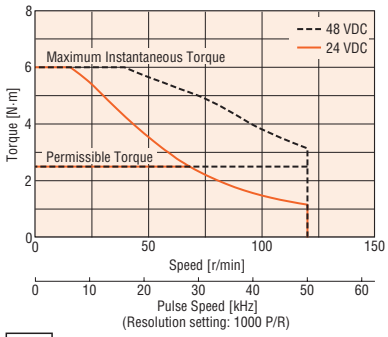

AZM46 Gear Ratio **36**

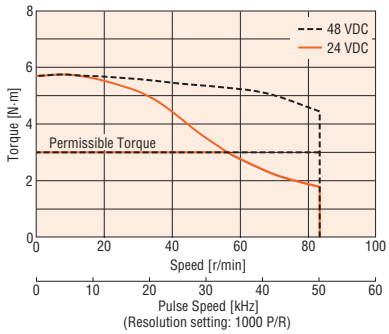

AZM46 Gear Ratio **50**

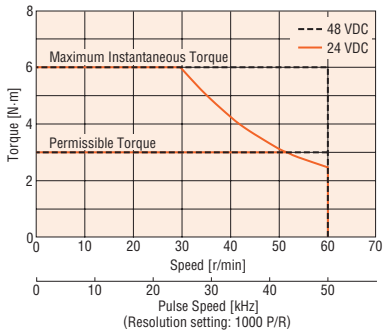

Note

● Data for the speed – torque characteristics is based on Oriental Motor's internal measurement conditions. If the conditions are changed, the characteristics may also change as a result.

● Depending on the driving conditions, a considerable amount of heat may be generated by the motor. To protect the absolute sensor, be sure to keep the temperature of the motor case at 80°C or less. (When conforming to the UL or CSA Standards, the temperature of the motor case must be kept at 75°C or less since the motor is recognized as heat-resistant class A.)

PS Geared Type Frame Size 60 mm

Specifications

Motor Product Name	Single Shaft	AZM66AK-PS5	AZM66AK-PS7.2	AZM66AK-PS10	AZM66AK-PS25	AZM66AK-PS36	AZM66AK-PS50
	With Electromagnetic Brake	AZM66MK-PS5	AZM66MK-PS7.2	AZM66MK-PS10	AZM66MK-PS25	AZM66MK-PS36	AZM66MK-PS50
Driver Product Name		AZD-K■					
Max. Holding Torque	N·m	3.5	4	5	8		
Rotor Inertia	J: kg·m^2	370×10^{-7} (530×10^{-7})*1					
Gear Ratio		5	7.2	10	25	36	50
Resolution	Resolution setting: 1000 P/R	0.072°/Pulse	0.05°/Pulse	0.036°/Pulse	0.0144°/Pulse	0.01°/Pulse	0.0072°/Pulse
Permissible Torque	N·m	3.5	4	5	8		
Max. Instantaneous Torque*	N·m	*	*	*	*	*	20
Holding Torque at Motor Standstill	Power ON N·m	2.5	3.6	5	7.6	8	
	Electromagnetic Brake N·m	2.5	3.6	5	7.6	8	
Speed Range	r/min	0~600	0~416	0~300	0~120	0~83	0~60
Backlash	arcmin	7 (0.12°)			9 (0.15°)		
Power Supply Input		Check "■Driver Specifications" on page 95 for the driver current when combined with a motor.					
Control Power Supply*2							

- A letter indicating the driver type is specified where the box ■ is located in the product name. Check "■ List of Combinations" on page 83 for driver product names.
- When the motor is operated from 48 VDC input, as a reference, use an inertial load 10 times the rotor inertial ratio or less and twice the safety factor or more when calculating the acceleration torque.

* For the geared motor output torque, refer to the speed–torque characteristics.

*1 The value inside the ( ) represents the value when connecting an electromagnetic brake motor.

*2 Excluding **AZD-KD**, **AZD-KX**, and **AZD-K**

Speed – Torque Characteristics (Reference values)

AZM66 Gear Ratio **5**

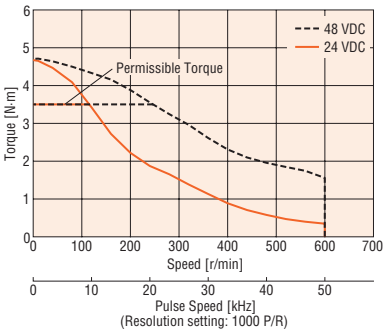

AZM66 Gear Ratio **7.2**

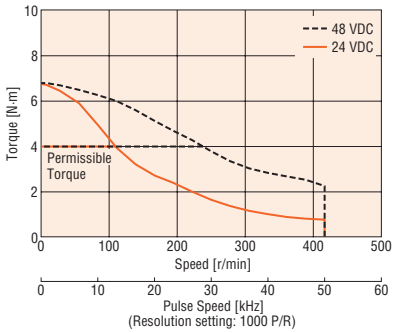

AZM66 Gear Ratio **10**

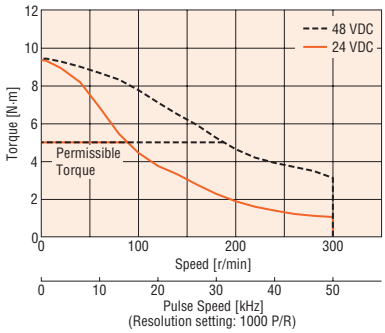

AZM66 Gear Ratio **25**

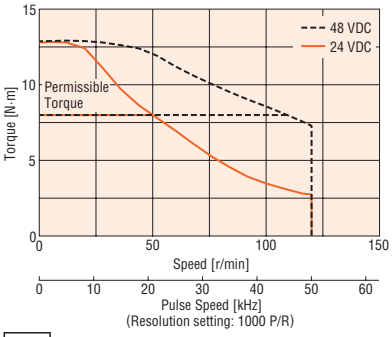

AZM66 Gear Ratio **36**

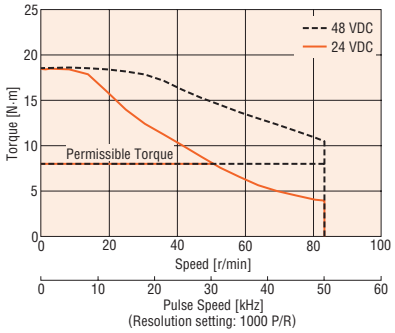

AZM66 Gear Ratio **50**

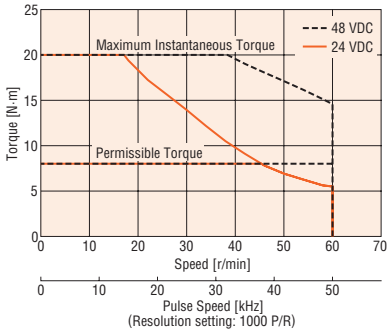

Note

- Data for the speed – torque characteristics is based on Oriental Motor's internal measurement conditions. If the conditions are changed, the characteristics may also change as a result.
- Depending on the driving conditions, a considerable amount of heat may be generated by the motor. To protect the absolute sensor, be sure to keep the temperature of the motor case at 80°C or less. (When conforming to the UL or CSA Standards, the temperature of the motor case must be kept at 75°C or less since the motor is recognized as heat-resistant class A.)

HPG Geared Type Frame Size 40 mm, 60 mm

Specifications

Motor Product Name	Single Shaft	AZM46AK-HP5□	AZM46AK-HP9□	AZM66AK-HP5□	AZM66AK-HP15□
	With Electromagnetic Brake	AZM46MK-HP5□	AZM46MK-HP9□	AZM66MK-HP5□	AZM66MK-HP15□
Driver Product Name		AZD-K■			
Max. Holding Torque	N·m	1.5	2.5	5	9
Rotor Inertia	J: kg·m^2	55×10^{-7} (71×10^{-7})*1		370×10^{-7} (530×10^{-7})*1	
Inertia*2	J: kg·m^2	5.8×10^{-7} (4.2×10^{-7})	3.4×10^{-7} (2.9×10^{-7})	92×10^{-7} (86×10^{-7})	78×10^{-7} (77×10^{-7})
Gear Ratio		5	9	5	15
Resolution	Resolution setting: 1000 P/R	0.072°/Pulse	0.04°/Pulse	0.072°/Pulse	0.024°/Pulse
Permissible Torque*	N·m	*	2.5	*	9
Max. Instantaneous Torque*	N·m	*	*	*	*
Holding Torque at Motor Standstill	Power ON N·m	0.75	1.35	2.5	7.5
	Electromagnetic Brake N·m	0.75	1.35	2.5	7.5
Permissible Speed Range	r/min	0~800	0~444	0~600	0~200
Backlash	arcmin	3 (0.05°)			
Output Flange Surface Runout*3	mm	0.02			
Output Flange Inner Runout*3	mm	0.03		0.04	
Power Supply Input Control Power Supply*4		Check "■Driver Specifications" on page 95 for the driver current when combined with a motor.			

- For the flange output type, **F** is specified where the box □ is located in the product name.
  A letter indicating the driver type is specified where the box ■ is located in the product name. Check "■List of Combinations" on page 83 for driver product names.
- As a reference, when the motor is operated with 48 VDC input, use a load inertia that is at least twice the safety factor but no more than 10 times the rotor inertial ratio when calculating the acceleration torque. (Excluding **AZM46**)

* For the geared motor output torque, refer to the speed–torque characteristics.
*1 The value inside the ( ) represents the value when connecting an electromagnetic brake motor.
*2 This is the value of the internal inertia of the gear converted to the motor shaft. ( ) contain values for the flange output type.
*3 Value for the flange output type.
*4 Excluding **AZD-KD**, **AZD-KX**, and **AZD-K**

Speed – Torque Characteristics (Reference values)

AZM46 Gear Ratio **5**

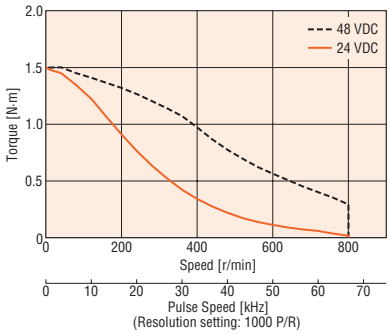

AZM46 Gear Ratio **9**

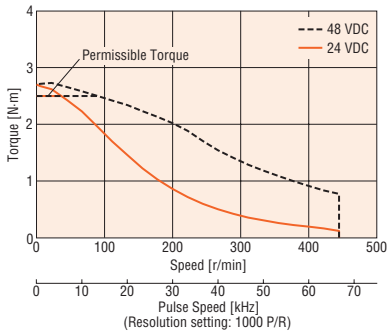

AZM66 Gear Ratio **5**

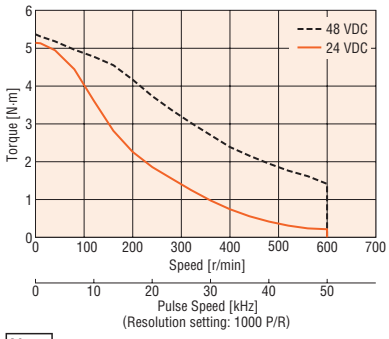

AZM66 Gear Ratio **15**

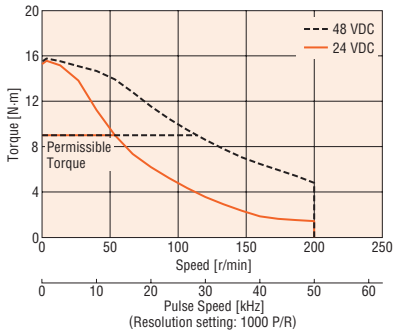

Note

- Data for the speed – torque characteristics is based on Oriental Motor's internal measurement conditions. If the conditions are changed, the characteristics may also change as a result.
- Depending on the driving conditions, a considerable amount of heat may be generated by the motor. To protect the absolute sensor, be sure to keep the temperature of the motor case at 80°C or less. (When conforming to the UL or CSA Standards, the temperature of the motor case must be kept at 75°C or less since the motor is recognized as heat-resistant class A.)

Harmonic Geared Type Frame Size 30 mm, 42 mm, 60 mm

Specifications

*2*3

Motor Product Name	Single Shaft	AZM24AK-HS50	AZM24AK-HS100	AZM46AK-HS50	AZM46AK-HS100	AZM66AK-HS50	AZM66AK-HS100
	With Electromagnetic Brake	–	–	AZM46MK-HS50	AZM46MK-HS100	AZM66MK-HS50	AZM66MK-HS100
Driver Product Name		AZD-K■					
Max. Holding Torque	N·m	1.8	2.4	3.5	5	7	10
Rotor Inertia	J: kg·m^2	12×10^{-7}		72×10^{-7} (88×10^{-7})*1		405×10^{-7} (565×10^{-7})*1	
Gear Ratio		50	100	50	100	50	100
Resolution	Resolution setting: 1000 P/R	0.0072°/Pulse	0.0036°/Pulse	0.0072°/Pulse	0.0036°/Pulse	0.0072°/Pulse	0.0036°/Pulse
Permissible Torque	N·m	1.8	2.4	3.5	5	7	10
Max. Instantaneous Torque*	N·m	3.3	4.8	8.3	11	*	36
Holding Torque at Motor Standstill	Power ON N·m	1.8	2.4	3.5	5	7	10
	Electromagnetic Brake N·m	–	–	3.5	5	7	10
Permissible Speed Range	r/min	0~70	0~35	0~70	0~35	0~60	0~30
Lost Motion (Load torque)	arcmin	1.5 max. (±0.09 N·m)	1.5 max. (±0.12 N·m)	1.5 max. (±0.16 N·m)	1.5 max. (±0.20 N·m)	0.7 max. (±0.28 N·m)	0.7 max. (±0.39 N·m)
Power Supply Input		Check "■Driver Specifications" on page 95 for the driver current when combined with a motor.					
Control Power Supply*2							

- A letter indicating the driver type is specified where the box ■ is located in the product name. Check "■List of Combinations" on page 83 for driver product names.
- When the motor is operated from 48 VDC input, as a reference, use an inertial load 10 times the rotor inertial ratio or less and twice the safety factor or more when calculating the acceleration torque (excluding **AZM46**).

* For the geared motor output torque, refer to the speed–torque characteristics.

*1 The value inside the ( ) represents the value when connecting an electromagnetic brake motor.

*2 Excluding **AZD-KD**, **AZD-KX**, and **AZD-K**

*3 Excluding the 30 mm frame size motor

Note

- The rotor inertia represents a sum of the inertia of the harmonic gear converted to motor shaft values.

Speed – Torque Characteristics (Reference values)

AZM24 Gear Ratio **50**

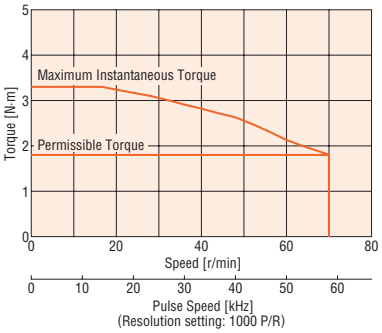

AZM46 Gear Ratio **50**

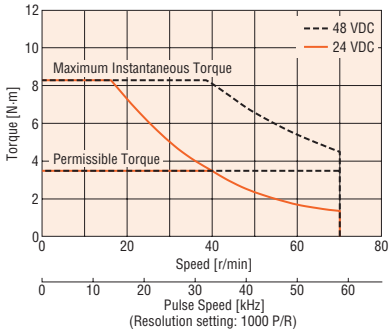

AZM66 Gear Ratio **50**

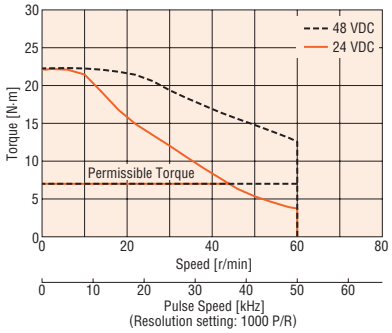

AZM24 Gear Ratio **100**

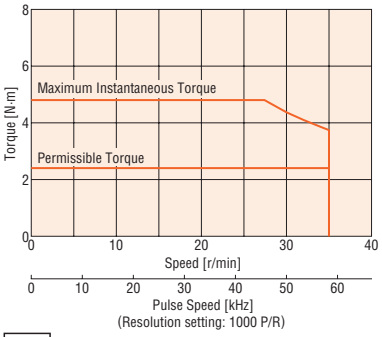

AZM46 Gear Ratio **100**

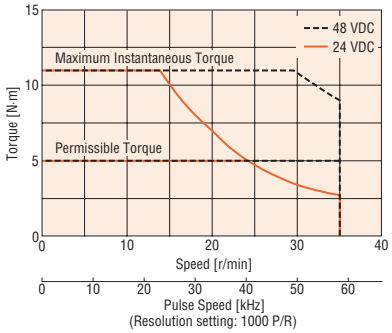

AZM66 Gear Ratio **100**

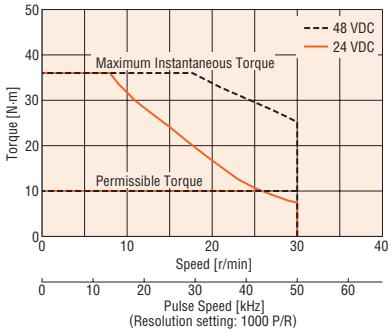

Note

- Data for the speed – torque characteristics is based on Oriental Motor's internal measurement conditions. If the conditions are changed, the characteristics may also change as a result.
- Depending on the driving conditions, a considerable amount of heat may be generated by the motor. To protect the absolute sensor, be sure to keep the temperature of the motor case at 80°C or less. (When conforming to the UL or CSA Standards, the temperature of the motor case must be kept at 75°C or less since the motor is recognized as heat-resistant class A.)

Driver Specifications

Driver Product Name			AZD-KD	AZD-KX AZD-K	AZD-KEP AZD-KED AZD-KPN
Main Power Supply	Input Voltage	**AZM14, AZM15** **AZM24, AZM26**	24 VDC±5%		
		AZM46, AZM48 **AZM66, AZM69**	- 24 VDC±5%*1 - 48 VDC±5%		- 24 VDC±5% - 48 VDC±5%
	Input Current	**AZM14**	0.5 A		0.4 A
		AZM15	0.6 A		0.5 A
		AZM24	1.6 A		1.6 A
		AZM26	1.6 A		1.5 A
		AZM46	1.72 A (1.8 A)*2		1.5 A
		AZM48	2.2 A		2.1 A
		AZM66	3.55 A (3.8 A)*2		3.3 A
		AZM69	3.45 A (3.7 A)*2		3.1 A
Control Power Supply	Input Voltage		–		24 VDC±5%*1
	Input Current		–		0.15 A (0.4 A)*3
Interface	Pulse Input		–	· 2 Points, Photocoupler · Maximum Input Pulse Frequency Line Driver: 1 MHz (50% duty) Open Collector: 250 kHz (50% duty)	
	Control Input		10 Points, Photocoupler	6 Points, Photocoupler	
	Pulse Output		2 Points, Line Driver		
	Control Output		6 Points, Photocoupler and Open-Collector		
	Power Shut Down Signal Input		–		2 Points, Photocoupler
	Power Shut Down Monitor Output		–		1 Point, Photocoupler and Open-Collector

*1 If an electromagnetic brake motor is used, it will be 24 VDC±4% when the distance between the motor and driver is extended to 20 m with an Oriental Motor cable.
*2 The value inside the ( ) represents the value when connecting an electromagnetic brake motor.
*3 The value inside the ( ) represents the value when connecting an electromagnetic brake motor. 0.23 A for **AZM46**.

Driver Functions

Built-in Controller Type, Pulse Input Type with RS-485 Communication, Pulse Input Type, EtherNet/IP compatible, PROFINET compatible

Driver Product Name				AZD-KD	AZD-KX	AZD-K	AZD-KEP AZD-KPN
Number of Positioning Data Sets				256 Points	256 Points*1		256 Points
Remote I/O	Input			16 Points		–	16 Points
	Output			16 Points		–	16 Points
Setting Tool				Support Software **MEXE02**			
Coordinates Management Method				Battery-Free Absolute System			
Operation	Positioning Operation	Product Line	Positioning Operation	○	○	○*1	○
			Positioning Push-Motion Operation*2	○	○	○*1	○
		Linking	Independent Operation	○	○	○*1	○
			Sequential Operation	○	○	○*1	○
			Multistep Speed-Change (Configuration Connection)	○	○	○*1	○
		Sequence Control	Loop Operation (Repeating)	○	○	○*1	○
			Event Jump Operation	○	○	○*1	○
	Speed Control Operation (Continuous operation)			○	○	○*1	○
	Return-To-Home Operation		Return-To-Home Operation	○	○	○	○
			High-Speed Return-to-Home Operation	○	○	○	○
	JOG Operation			○	○	○	○
Monitor/Information			Waveform Monitoring	○	○	○	○
			Overload Detection	○	○	○	○
			Overheat Detection (Motor/Driver)	○	○	○	○
			Position/Speed Information	○	○	○	○
			Temperature Detection (Motor/Driver)	○	○	○	○
			Motor Load Factor	○	○	○	○
			Distance Traveled/Integrating Distance Traveled	○	○	○	○
Alarm				○	○	○	○

*1 This can be used via the support software **MEXE02**.
*2 Push-motion operation is not used in the **DGII** Series linear & rotary actuators or geared motors.

EtherCAT Drive Profile compatible

Driver Product Name		AZD-KED
Remote I/O	Input	16 Points
	Output	16 Points
Operation Mode		Profile Position Mode (PP)
		Profile Speed Mode (PV)
		Return-to-Home Mode (HM)
		Cyclic Synchronous Position Mode (CSP)
		Cyclic Synchronous Speed Mode (CSV)
Setting Tool		Support Software **MEXE02**
Coordinates Management Method		Battery-Free Absolute System
Monitor/Information		Same as the table above.
Alarm		○

Communication Specifications

RS-485 Communication

Protocol	Modbus RTU Mode
Electrical Characteristics	EIA-485 Based, Straight Cable Use twisted-pair cables (TIA/EIA-568B CAT5e or better recommended). The max. total extension length is 50 m. *
Communication Mode	Half Duplex and Start-Stop Synchronization (Data: 8 bits, stop bit: 1 bit or 2 bits, parity: none, even, or odd)
Baud Rate	9600 bps/19200 bps/38400 bps/57600 bps/115200 bps/230400 bps are available
Connection Type	Up to 31 units can be connected to a single programmable controller (master equipment).

*If noise generated by the motor cable or power supply cable causes a problem with the specific wiring or layout, shield the cable or use ferrite cores.

EtherNet/IP

Communication Protocol		EtherNet/IP (Complies with CT16)
Vendor ID		187: Oriental Motor Company
Device Type		43: Generic Device
Baud Rate		10/100 Mbps (Autonegotiation)
Communication Mode		Full Duplex/Half Duplex (Autonegotiation)
Cable Specifications		Shielded Twisted-Pair (STP) Cable Stroke/Cross, Category 5e min.
Bytes	Output (Scanner→driver)	40 bytes
	Input (Driver→scanner)	56 bytes
Implicit Communication	Compatible Connections	2
	Connection Type	Exclusive Owner, Input Only
	Communication Cycle (RPI)	1～3200 ms
	Connection Type (Scanner→driver)	Point－to－Point
	Connection Type (Driver→scanner)	Point－to－Point, Multicast
	Data Reflection Trigger	Cyclic
IP Address Setting Method		IP Address Setting Switch, Parameter, DHCP
Compatible Topologies		Star, Linear, Ring (Device Level Ring)

EtherCAT

Communication Protocol	IEC 61158 Type12
Physical Layer/Protocol	100 BASE-TX (IEEE 802.3)
Baud Rate	100 Mbps
Communication Cycle	・Free Run Mode: 1 ms min. ・SM2 Event Synchronous Mode: 1 ms min. ・DC Mode: 0.25 ms, 0.5 ms, 1 ms, 2 ms, 3 ms, 4 ms, 5 ms, 6 ms, 7 ms, 8 ms
Communication Port/ Connector	RJ45×2 (Shield-compatible) ECAT IN: EtherCAT Input ECAT OUT: EtherCAT Output
Topology	Daisy Chain (Max. 65,535 nodes)
Process Data	Variable PDO Mapping
Sync Manager	・SM0: Mailbox Output ・SM1: Mailbox Input ・SM2: Process Data Output ・SM3: Process Data Input
Mailbox (CoE)	・Emergency Messages ・SDO Requests ・SDO Responses ・SDO Information
Synchronous Mode	・Free Run Mode (Asynchronous) ・SM2 Event Synchronous Mode ・DC Mode (SYNC0 Event Synchronous)
Device Profile	IEC 61800-7 CiA402 Drive Profile

PROFINET

Communication Protocol		PROFINET IO Ver.2.4
Vendor ID		0x33E: ORIENTAL MOTOR
Baud Rate		100 Mbps (Autonegotiation)
Communication Mode		Full Duplex (Autonegotiation)
Cable Specifications		Shielded Twisted-Pair (STP) Cable Stroke/Cross, Category 5e min. Recommended
Communication Connector		RJ45×2 (Shield-compatible)
Conformance Class		B
RT/IRT		RT
NetLoad Class		I
Supported Protocols		DCP, LLDP, SNMP, MRP*
Bytes	Output (Host System→driver)	40 byte
	Input (Driver→host system)	56 byte
Compatible Topologies		Star, Tree, Line, Ring*

*Specifications will vary according to the driver. Identify them using either the Module Software Version or the driver's date of manufacture.
The Module Software Version can be confirmed on either the **MEXE02** PROFINET monitor or the host system's setting tool.

- If the Module Software Version is 2.00 or later or the driver's date of manufacture is June 2022 or later
  Compatible with MRP and Ring.
- If the Module Software Version is 1.00 or earlier or the driver's date of manufacture is May 2022 or earlier
  The driver is certified as a 1-port PROFINET product. The output LLDP/SNMP information is the same regardless of which communication connector it is connected to.
  Not compatible with MRP or Ring.

General Specifications

		Motor	Driver
Thermal Class		130 (B) [UL/CSA is certified as compliant with 105 (A)]	–
Insulation Resistance		100 MΩ or more when a 500 VDC megger is applied between the following places: · Case–Motor Winding · Case–Electromagnetic Brake Winding*1	100 MΩ or more when a 500 VDC megger is applied between the following places: · Protective Earth Terminal–Power Supply Terminal
Dielectric Strength		Sufficient to withstand the following for 1 minute: **AZM14**, **AZM15**, **AZM24**, **AZM26** · Case–Motor Winding 0.5 kVAC 50 Hz or 60 Hz **AZM46**, **AZM48**, **AZM66**, **AZM69** · Case–Motor Winding 1.0 kVAC 50 Hz or 60 Hz · Case–Electromagnetic Brake Winding*1 1.0 kVAC 50 Hz or 60 Hz	–
Operating Environment (In operation)	Ambient Temperature	0～+40°C (Non-freezing)	0～+50°C (Non-freezing)
	Ambient Humidity	85% or less (Non-condensing)	
	Atmosphere	No corrosive gases or dust. The product should not be exposed to water, oil or other liquids.	
Degree of Protection		**AZM14**, **AZM15**, **AZM24**, **AZM26**, **AZM46***2, **AZM48***2, **AZM66***2, **AZM69***2: IP40 (excluding installation surfaces and connectors) **AZM46**, **AZM48**, **AZM66**, **AZM69**: IP66 (excluding installation surfaces and connectors)	IP10
Stop Position Accuracy		**AZM14**, **AZM15**, **AZM24**, **AZM26**: ±5 arc minutes (±0.083°) **AZM46**, **AZM48**: ±4 arc minutes (±0.067°) **AZM66**, **AZM69**: ±3 arch minutes (±0.05°)	
Shaft Runout		0.05T.I.R. (mm)*3	–
Concentricity of Installation Pilot to the Shaft		0.075T.I.R. (mm)*3	–
Perpendicularity of Installation Surface to the Shaft		0.075T.I.R. (mm)*3	–
Multiple Rotation Detection Range in Power OFF State		**AZM14**, **AZM15**, **AZM24**, **AZM26**: ±450 rotations (900 rotations) **AZM46**, **AZM48**, **AZM66**, **AZM69**: ±900 rotations (1800 rotations)	

*1 Only for products with an electromagnetic brake.
*2 If the motor cable configuration is horizontal outlet
*3 T. I. R. (Total Indicator Reading): The total dial gauge reading when the measurement section is rotated once around the reference axis center.

Note
● Separate the motor and driver when measuring insulation resistance or performing a dielectric voltage withstand test.
Also, do not perform these tests on the absolute sensor part of the motor.

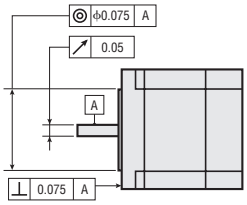

Electromagnetic Brake Specifications

Product Name		AZM46	AZM66	AZM69
Type		Power Off Activated Type		
Power Supply Voltage		24 VDC±5%*		
Power Supply Current	A	0.08	0.25	0.25
Time Rating		Continuous		

*For the type with an electromagnetic brake, a 24 VDC±4% specification applies if the wiring distance between the motor and driver is extended to 20 m using a cable.

Rotation Direction

This indicates the rotation direction when viewed from the output shaft side of the motor.
The rotation direction of the output gear shaft relative to the standard type motor output shaft varies depending on the gear type and gear ratio.
Please check the following table.

Type	Gear Ratio	Rotation Direction when Viewed from the Output Shaft Side of the Motor
TS Geared Type	**3.6**, **7.2**, **10**	Same Direction
	20, **30**	Opposite Direction
FC Geared Type **PS** Geared Type **HPG** Geared Type	Total Gear Ratio	Same Direction
Harmonic Geared Type	Total Gear Ratio	Opposite Direction

● Standard Type Motor

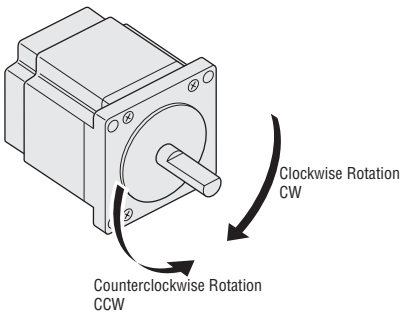

Motor Installation

When installing, pay particular attention to the installation location, because the absolute sensor can easily be affected by magnetic force.

Installing a Motor with a Frame Size of 28 mm or Less

When installing the motor in parallel, leave a buffer space that is equal to or greater than the other motor's size (frame size) both horizontally and vertically.

● Reference

Other Motor	A
Frame Size 20 mm	20
Frame Size 28 mm	28
Frame Size 42 mm	42
Frame Size 60 mm	60

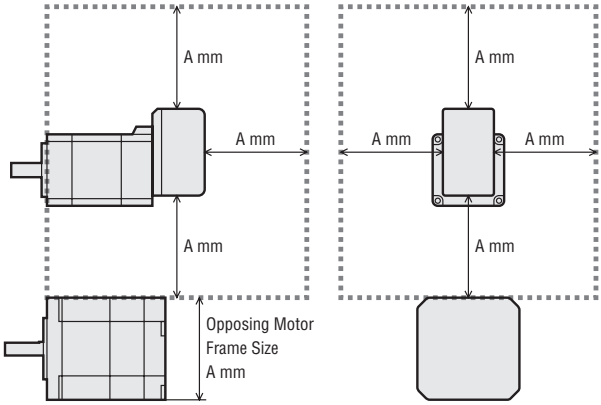

● Leave a buffer space equal to or greater than the motor's frame size (A mm).

Installing a Motor in an Environment with a Field System

Ensure that the magnetic flux density of the absolute sensor surface does not exceed the value in the table.

Motor Frame Size	Magnetic Flux Density
28 mm max.	2 mT*
42 mm min.	10 mT

*If it exceeds 1 mT but is 2 mT or less, use with the operating ambient temperature above 20°C but 40°C or less.

Permissible Radial Load and Permissible Axial Load

Unit: N

Type	Motor Frame Size	Product Name	Gear Ratio	Permissible Radial Load: Distance from Shaft End mm 0	5	10	15	20	Permissible Axial Load
Standard Type	20 mm	**AZM14, AZM15**	–	12	15	–	–	–	3
	28 mm	**AZM24, AZM26**		25	34	52	–	–	5
	42 mm	**AZM46**		35	44	58	85	–	15
		AZM48		30	35	44	58	85	
	60 mm	**AZM66, AZM69**		90	100	130	180	270	30
TS Geared Type	42 mm	**AZM46**	**3.6, 7.2, 10**	20	30	40	50	–	15
			20, 30	40	50	60	70	–	
	60 mm	**AZM66**	**3.6, 7.2, 10**	120	135	150	165	180	40
			20, 30	170	185	200	215	230	
FC Geared Type	42 mm	**AZM46**	**7.2, 10, 20, 30**	180	200	220	250	–	100
	60 mm	**AZM66**		270	290	310	330	350	200
PS Geared Type	28 mm	**AZM24**	**7.2, 10**	45	60	80	100	–	40
	42 mm	**AZM46**	**5**	70	80	95	120	–	100
			7.2	80	90	110	140	–	
			10	85	100	120	150	–	
			25	120	140	170	210	–	
			36	130	160	190	240	–	
			50	150	170	210	260	–	
	60 mm	**AZM66**	**5**	170	200	230	270	320	200
			7.2	200	220	260	310	370	
			10	220	250	290	350	410	
			25	300	340	400	470	560	
			36	340	380	450	530	630	
			50	380	430	500	600	700	
HPG Geared Type	40 mm	**AZM46**	**5**	150	170	190	230	270	430
			9	180	200	230	270	320	510
	60 mm	**AZM66**	**5**	250	270	300	330	360	700
			15	360	380	420	460	510	980
Harmonic Geared Type	30 mm	**AZM24**	**50, 100**	100	135	175	250	–	140
	42 mm	**AZM46**		180	220	270	360	510	220
	60 mm	**AZM66**		320	370	440	550	720	450

● The product names are listed such that the product names are distinguishable.

● The **PS** geared type and **HPG** geared type have a full lifespan of 20,000 hours when either the permissible radial load or the permissible axial load is applied. For the life of gearhead, please contact the nearest Oriental Motor sales office, or visit the Oriental Motor website.

Radial Load and Axial Load

Distance from Shaft End [mm]

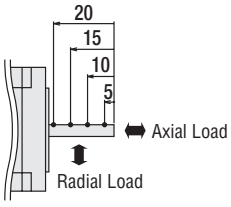

Permissible Moment Load

If an eccentric load is applied to the output flange-installation surface, load moment acts on the bearing.
Confirm before use that the axial load and load moment are within specification with the following formulas.

●HPG Geared Type　Flange Output Type

Product Name	Gear Ratio	Permissible Axial Load (N)	Permissible Moment Load (N·m)	Constant α(m)
AZM46	5	430	4.9	0.006
	9	510	5.9	
AZM66	5	700	12.0	0.011
	15	980	17.2	

m : Load mass (kg)
g : Gravitational acceleration (m/s^2)
F : External force (N)
L : Overhung distance (m)
a : Constant (m)
ΔF : Load applied to output flange face (N)
Fs : Permissible axial load (N)
ΔM : Load moment (N·m)
M : Permissible moment load (N·m)

The load moment can be calculated with the following formula.

Example 1: External force F (N) applied to the overhung position L (m) in a horizontal direction from the center of the output flange

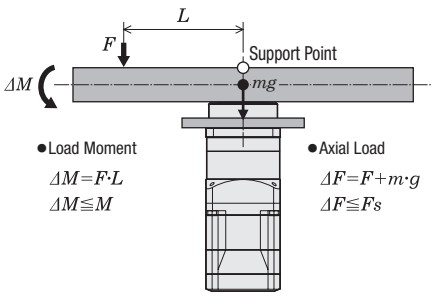

Example 2: External force F (N) applied to the overhung position L (m) in a vertical direction from the center of the output flange

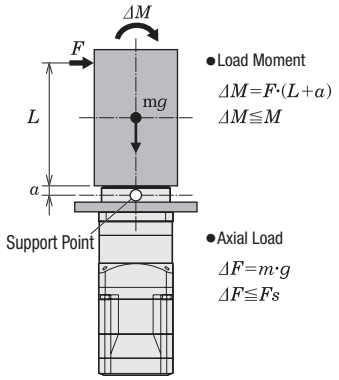

●Harmonic Geared Type

Motor Frame Size	Permissible Axial Load (N)	Permissible Moment Load (N·m)	Constant α(m)
30 mm	140	2.9	0.0073
42 mm	220	5.6	0.009
60 mm	450	11.6	0.0114

The permissible moment load can be calculated with the following formula.

Example 1: External force F (N) applied to the overhung position L (m) in a horizontal direction from the center of the output flange

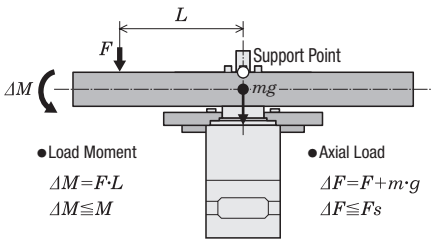

Example 2: External force F (N) applied to the overhung position L (m) in a vertical direction from the center of the output flange

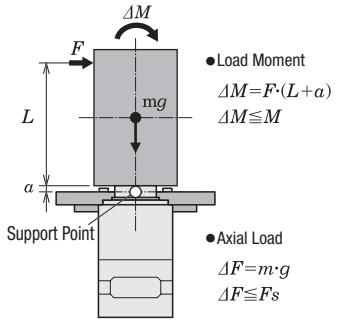

Harmonic Geared Type Accuracy

➜ Page 41

Load Torque – Driver Input Current Characteristics

This is the relationship between load torque and driver input current at various speeds under actual operation conditions. Due to these characteristics, it is possible to estimate the power supply capacity required to use the multi-axis. For geared types, use the speed and torque at the motor shaft.

Motor Shaft Speed=Output Gear Shaft Speed×Gear Ratio [r/min]

$$\text{Motor Shaft Torque}=\frac{\text{Output Gear Shaft Torque}}{\text{Gear Ratio}}\ [\text{N·m}]$$

●24 VDC

AZM14

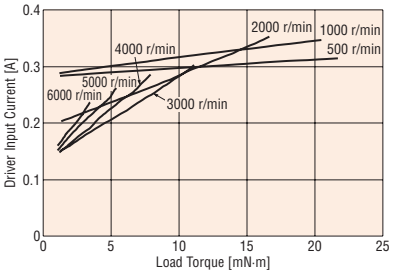

AZM46

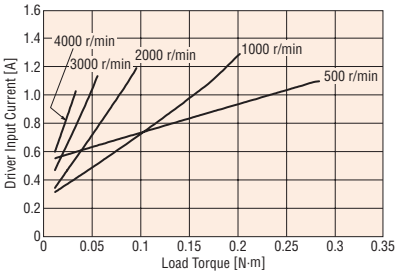

AZM15

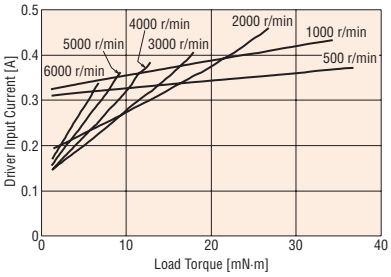

AZM48

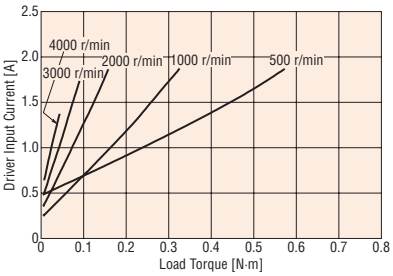

AZM24

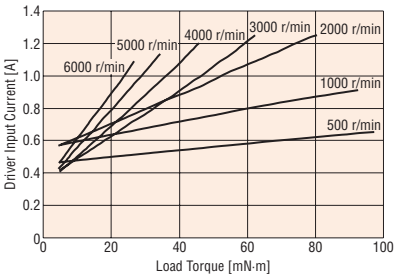

AZM66

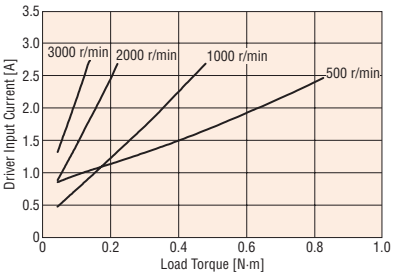

AZM26

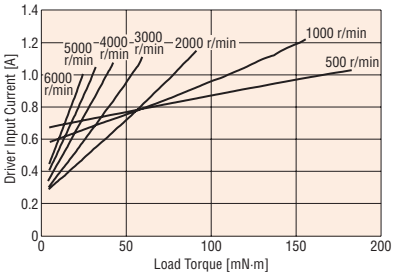

AZM69

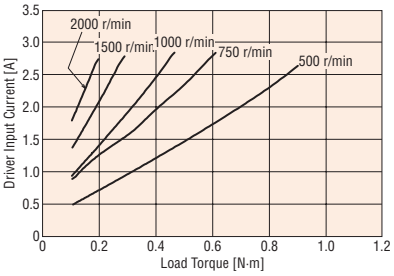

●48 VDC

AZM46

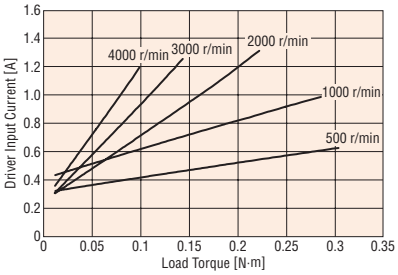

AZM48

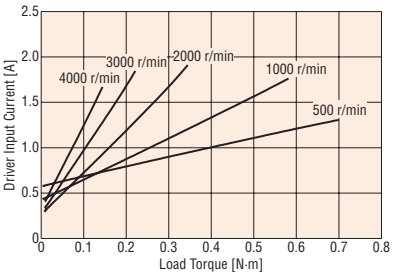

AZM66

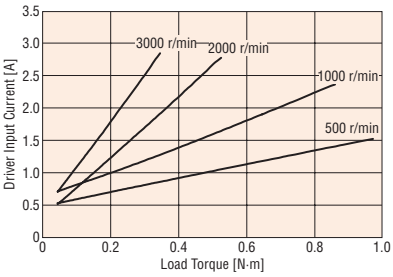

AZM69

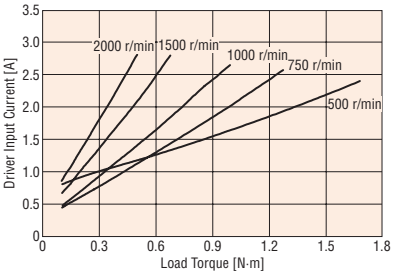

Dimensions (Unit = mm)

●Motor

◇Standard Type

Frame Size 20 mm

2D & 3D CAD

Product Name	L	Mass kg	2D CAD
AZM14AK	50	0.08	B1212
AZM15AK	60	0.1	B1213

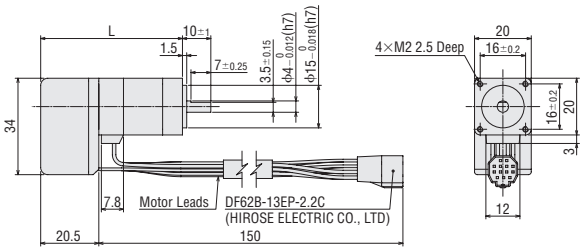

Frame Size 28 mm

2D & 3D CAD

Product Name	L	Mass kg	2D CAD
AZM24AK	54.5	0.15	B1214
AZM26AK	74	0.24	B1215

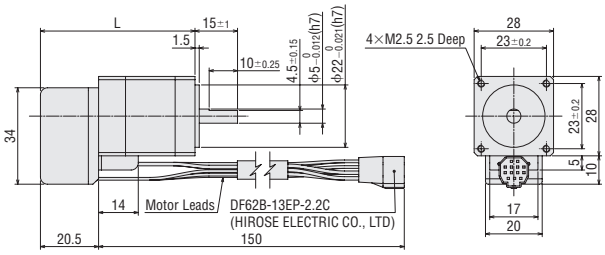

Frame Size 42 mm

2D & 3D CAD

Motor Shaft Type	Product Name	Mass kg	2D CAD
Round Shaft with Flat	**AZM46AK**	0.44	B1092
Straight Type	**AZM46A0K**		B1288

Round Shaft with Flat

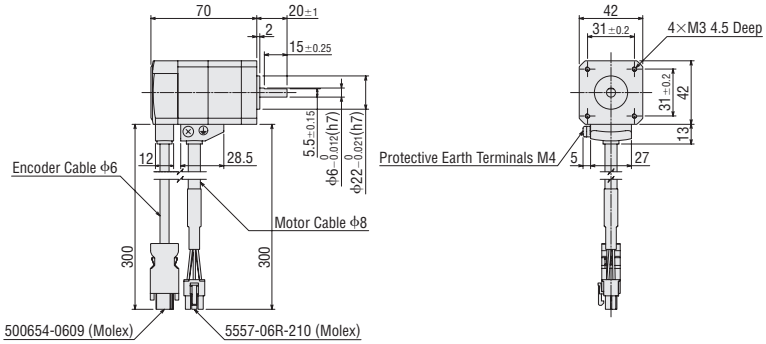

Straight Type

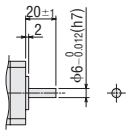

Frame Size 42 mm
Cable Outlet Horizontal Direction

2D & 3D CAD

Motor Shaft Type	Product Name	Mass kg	2D CAD
Straight Type	**AZM46A0KF**	0.44	B1428

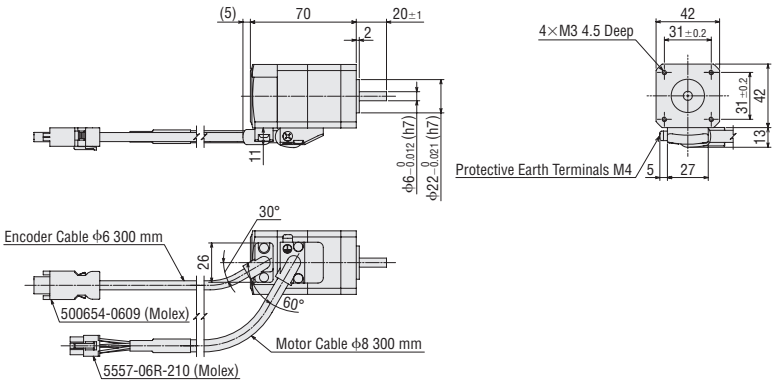

Frame Size 42 mm

2D & 3D CAD

Motor Shaft Type	Product Name	Mass kg	2D CAD
Round Shaft with Flat	**AZM48AK**	0.68	B1312
Straight Type	**AZM48A0K**		B1289
With Key	**AZM48A1K**		B1299

Round Shaft with Flat

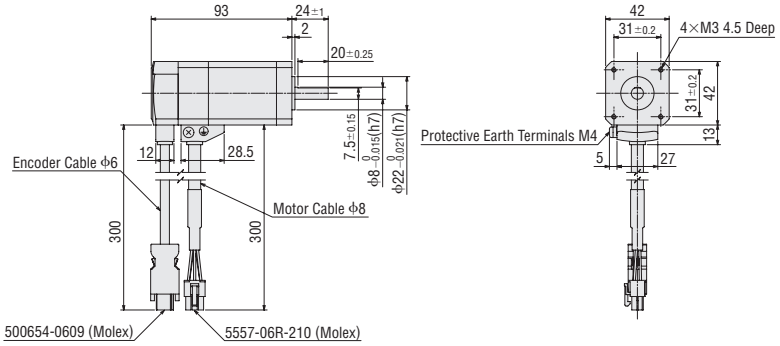

Straight Type

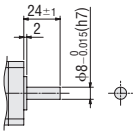

With Key

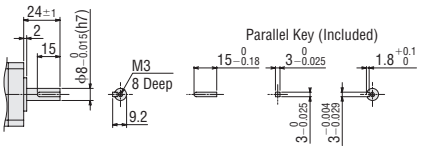

Frame Size 42 mm
Cable Outlet Horizontal Direction

2D & 3D CAD

Motor Shaft Type	Product Name	Mass kg	2D CAD
Straight Type	**AZM48A0KF**	0.68	B1430

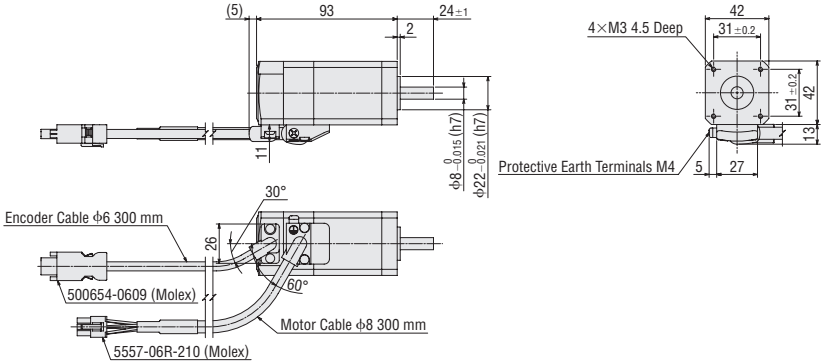

Frame Size 60 mm

2D & 3D CAD

Motor Shaft Type	Product Name	L	Mass kg	2D CAD
Round Shaft with Flat	**AZM66AK**	72	0.91	B1093
Straight Type	**AZM66A0K**			B1290
With Key	**AZM66A1K**			B1300
Round Shaft with Flat	**AZM69AK**	97.5	1.4	B1129
Straight Type	**AZM69A0K**			B1291
With Key	**AZM69A1K**			B1301

Round Shaft with Flat

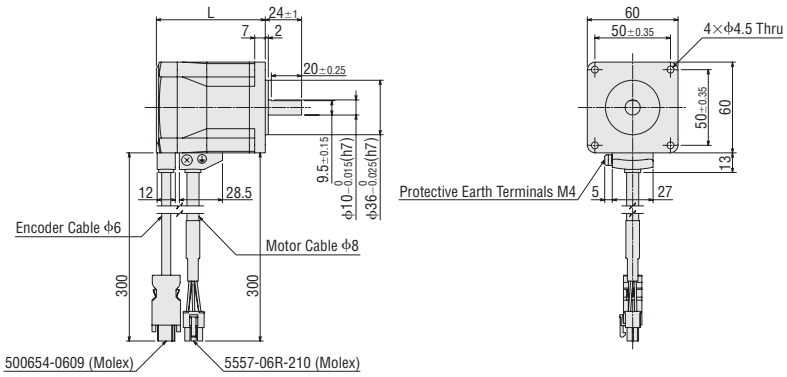

Straight Type

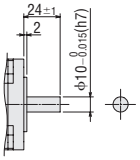

With Key

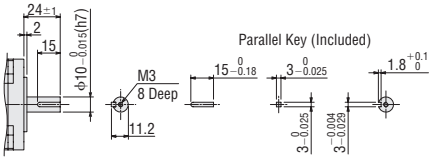

Frame Size 60 mm Cable Outlet Horizontal Direction

2D & 3D CAD

Motor Shaft Type	Product Name	L	Mass kg	2D CAD
Straight Type	**AZM66A0KF**	72	0.91	B1431
	AZM69A0KF	97.5	1.4	B1433

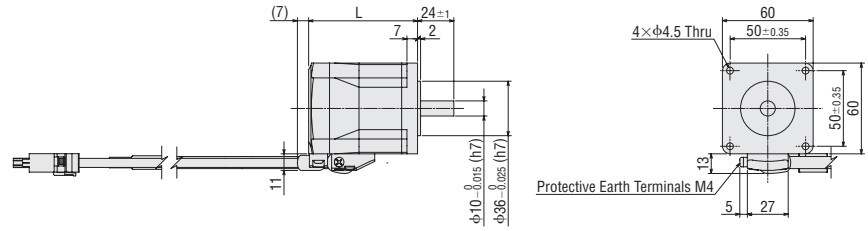

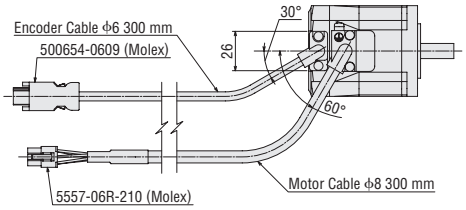

◇Standard Type with an Electromagnetic Brake

Frame Size 42 mm

2D & 3D CAD

Motor Shaft Type	Product Name	Mass kg	2D CAD
Round Shaft with Flat	**AZM46MK**	0.61	B1154
Straight Type	**AZM46M0K**		B1294

Round Shaft with Flat

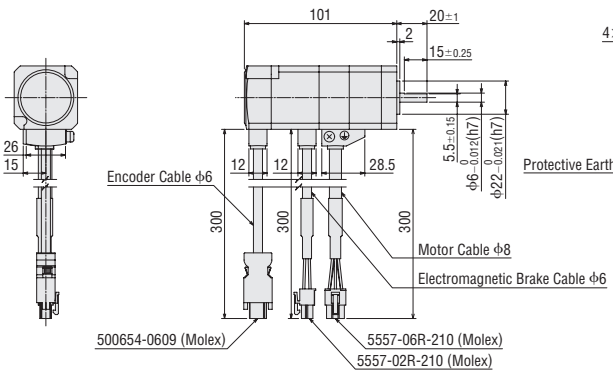

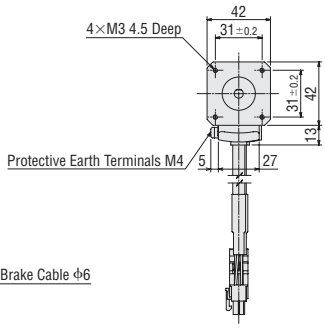

Straight Type

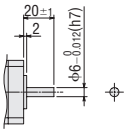

Frame Size 42 mm
Cable Outlet Horizontal Direction

2D & 3D CAD

Motor Shaft Type	Product Name	Mass kg	2D CAD
Straight Type	**AZM46M0KF**	0.61	B1429

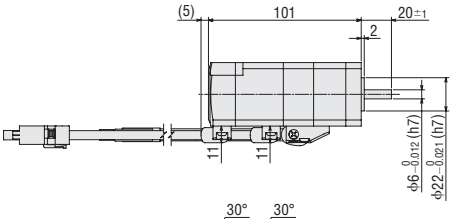

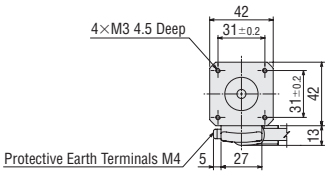

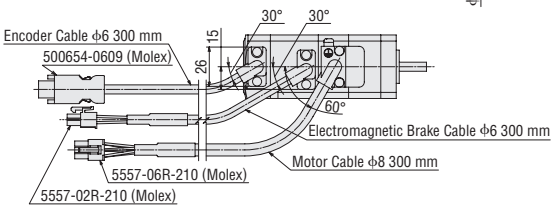

Frame Size 60 mm

2D & 3D CAD

Motor Shaft Type	Product Name	L	Mass kg	2D CAD
Round Shaft with Flat	**AZM66MK**	118	1.3	B1155
Straight Type	**AZM66M0K**			B1295
With Key	**AZM66M1K**			B1305
Round Shaft with Flat	**AZM69MK**	143.5	1.8	B1156
Straight Type	**AZM69M0K**			B1296
With Key	**AZM69M1K**			B1306

Round Shaft with Flat

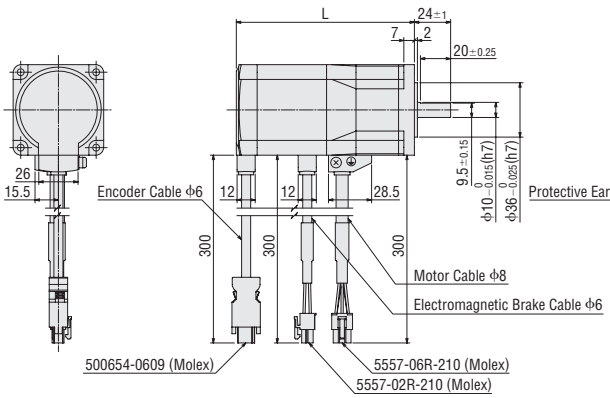

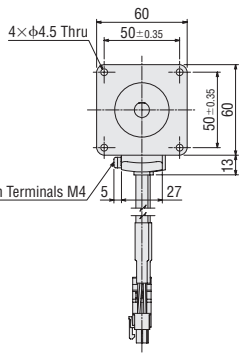

Straight Type

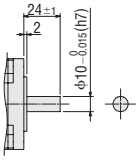

With Key

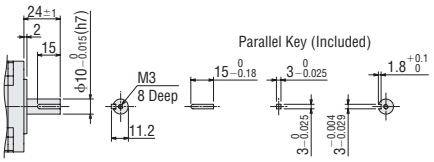

Frame Size 60 mm Cable Outlet Horizontal Direction

2D & 3D CAD

Motor Shaft Type	Product Name	L	Mass kg	2D CAD
Straight Type	**AZM66M0KF**	118	1.3	B1432
	AZM69M0KF	143.5	1.8	B1434

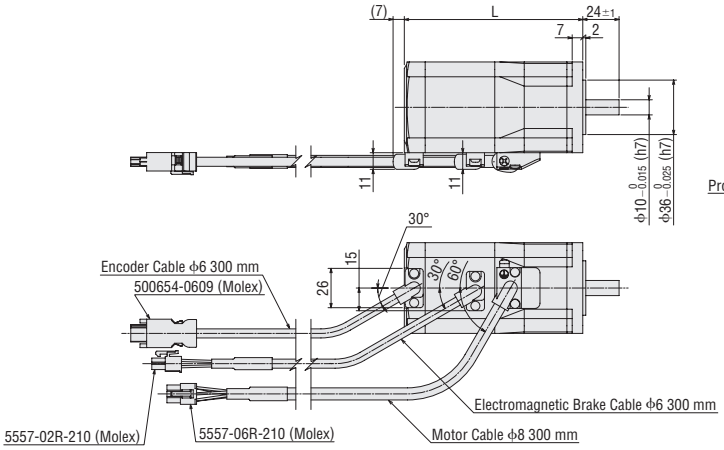

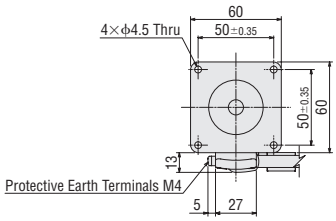

◇TS Geared Type

Frame Size 42 mm

2D & 3D CAD

Cable Outlet Direction	Product Name	Gear Ratio	Mass kg	2D CAD
Down	**AZM46AK-TS■**	**3.6, 7.2, 10, 20, 30**	0.59	B1157
Right	**AZM46AK-TS■R**			B1272
Up	**AZM46AK-TS■U**			B1270
Left	**AZM46AK-TS■L**			B1271

● Cable Outlet Direction

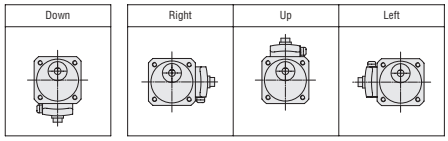

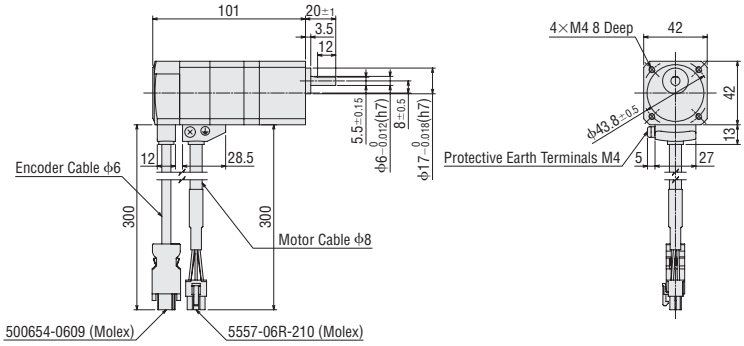

Frame Size 60 mm

2D & 3D CAD

Cable Outlet Direction	Product Name	Gear Ratio	Mass kg	2D CAD
Down	**AZM66AK-TS■**	**3.6, 7.2, 10, 20, 30**	1.3	B1158
Right	**AZM66AK-TS■R**			B1275
Up	**AZM66AK-TS■U**			B1273
Left	**AZM66AK-TS■L**			B1274

● Cable Outlet Direction

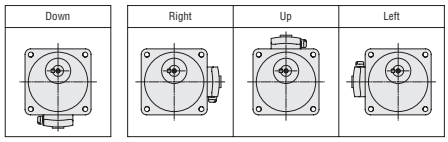

● Installation Screws: M4×60 P0.7 (4 screws included)

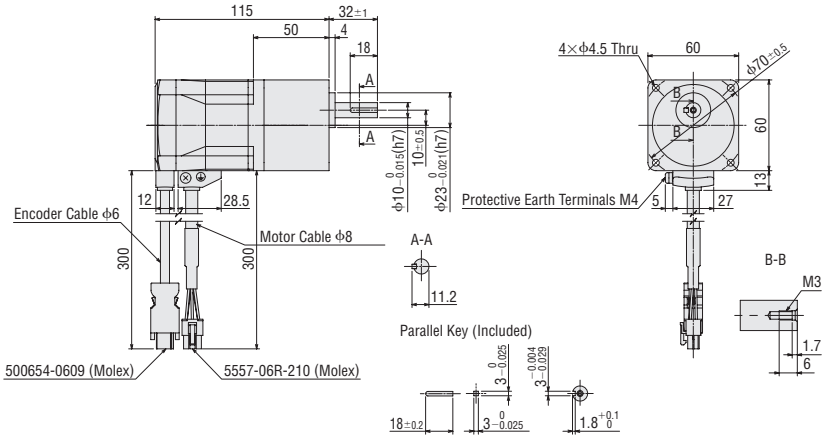

◇TS Geared Type with Electromagnetic Brake

Frame Size 42 mm

2D & 3D CAD

Cable Outlet Direction	Product Name	Gear Ratio	Mass kg	2D CAD
Down	**AZM46MK-TS■**	**3.6, 7.2, 10, 20, 30**	0.76	B1216
Right	**AZM46MK-TS■R**			B1284
Up	**AZM46MK-TS■U**			B1282
Left	**AZM46MK-TS■L**			B1283

● Cable Outlet Direction

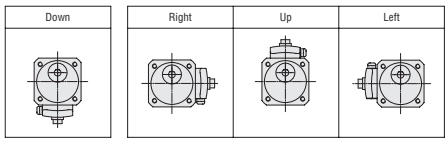

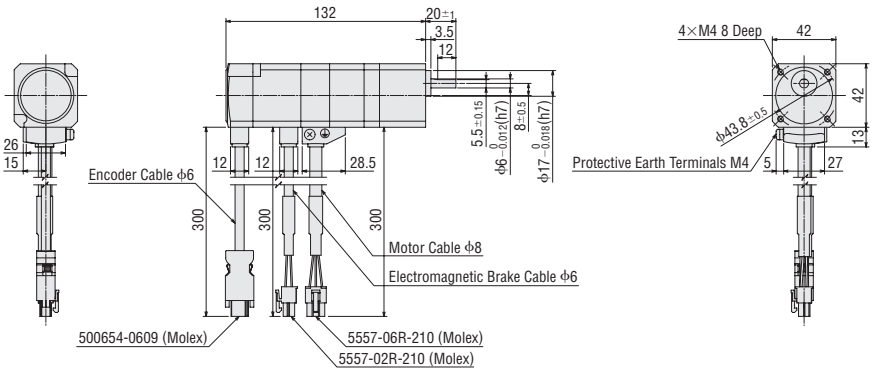

● A number indicating the gear ratio is specified where the box ■ is located in the product name.

Frame Size 60 mm

2D & 3D CAD

Cable Outlet Direction	Product Name	Gear Ratio	Mass kg	2D CAD
Down	**AZM66MK-TS■**	**3.6**, **7.2**, **10**, **20**, **30**	1.7	B1217
Right	**AZM66MK-TS■R**			B1287
Up	**AZM66MK-TS■U**			B1285
Left	**AZM66MK-TS■L**			B1286

● Cable Outlet Direction

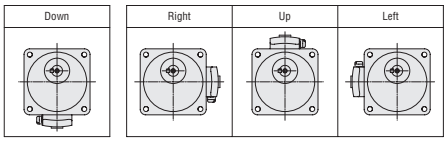

● Installation Screws: M4×60 P0.7 (4 screws included)

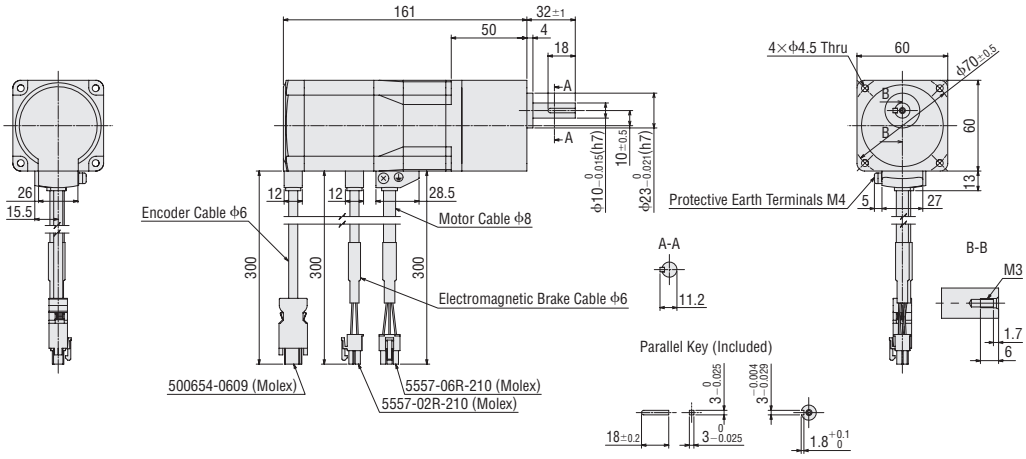

◇**FC** Geared Type

Frame Size 42 mm Cable Outlet Direction Up

2D & 3D CAD

Product Name	Gear Ratio	Mass kg	2D CAD
AZM46AK-FC■UA	**7.2**, **10**, **20**, **30**	0.79	B1314

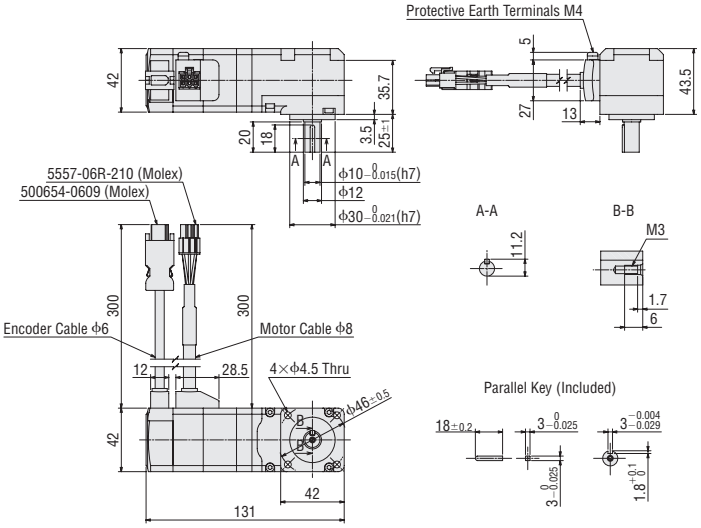

Frame Size 42 mm Cable Outlet Direction Down

2D & 3D CAD

Product Name	Gear Ratio	Mass kg	2D CAD
AZM46AK-FC■DA	**7.2**, **10**, **20**, **30**	0.79	B1313

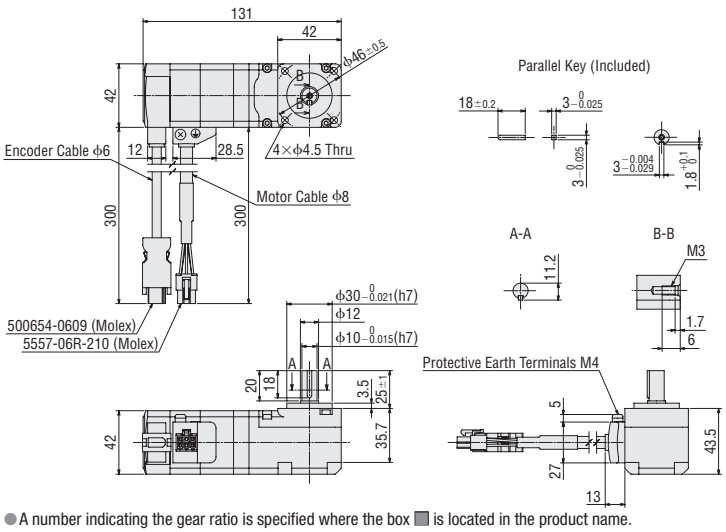

● A number indicating the gear ratio is specified where the box ■ is located in the product name.

Frame Size 60 mm Cable Outlet Direction Up

2D & 3D CAD

Product Name	Gear Ratio	Mass kg	2D CAD
AZM66AK-FC□UA	**7.2, 10, 20, 30**	1.8	B1318

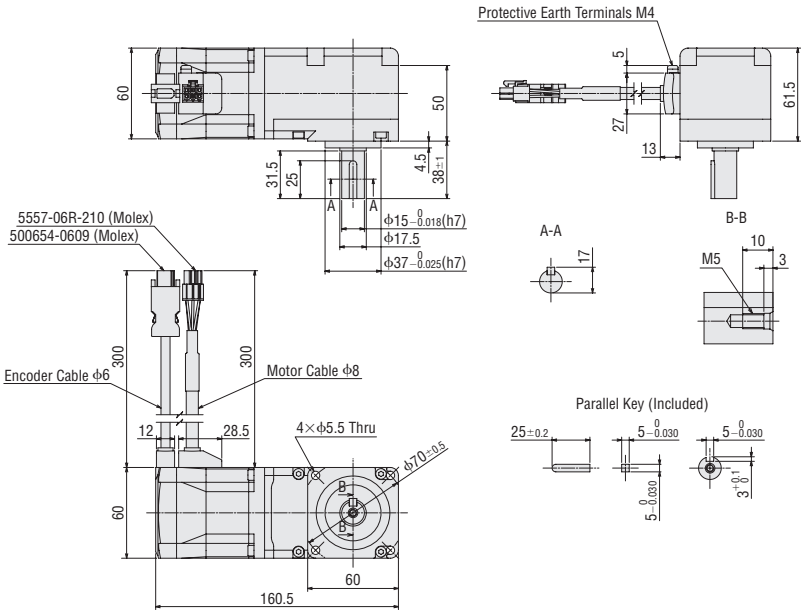

Frame Size 60 mm Cable Outlet Direction Down

2D & 3D CAD

Product Name	Gear Ratio	Mass kg	2D CAD
AZM66AK-FC□DA	**7.2, 10, 20, 30**	1.8	B1317

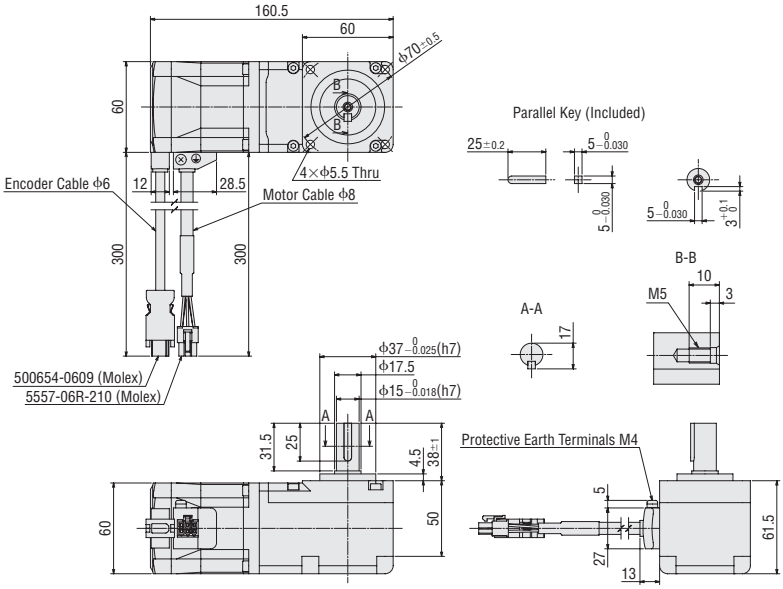

● A number indicating the gear ratio is specified where the box ■ is located in the product name.

◇**FC** Geared Type with Electromagnetic Brake

Frame Size 42 mm Cable Outlet Direction Up

2D & 3D CAD

Product Name	Gear Ratio	Mass kg	2D CAD
AZM46MK-FC■UA	**7.2**, **10**, **20**, **30**	0.96	B1316

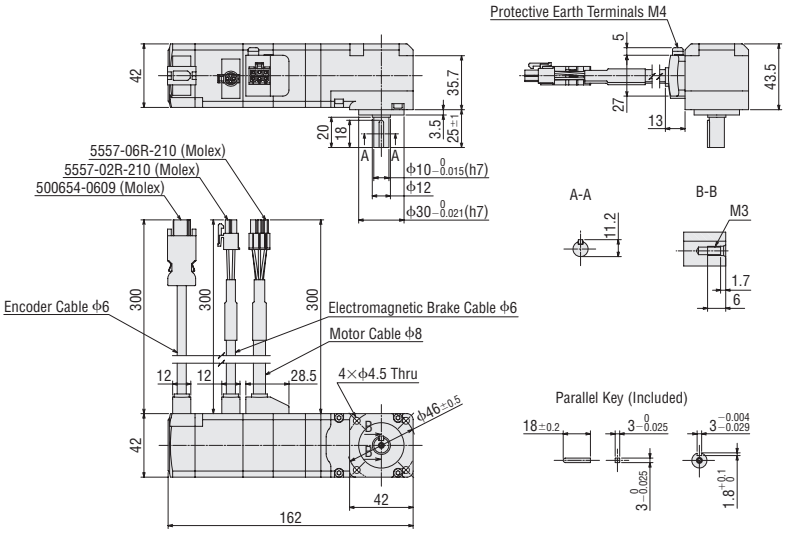

Frame Size 42 mm Cable Outlet Direction Down

2D & 3D CAD

Product Name	Gear Ratio	Mass kg	2D CAD
AZM46MK-FC■DA	**7.2**, **10**, **20**, **30**	0.96	B1315

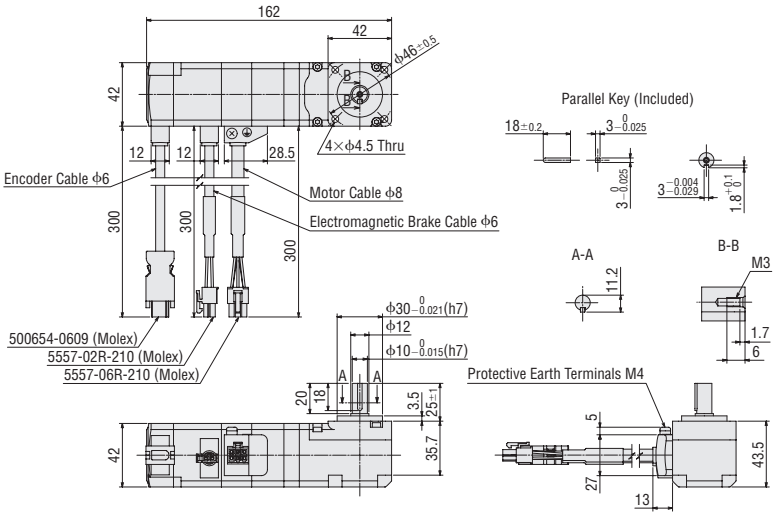

● A number indicating the gear ratio is specified where the box ■ is located in the product name.

Frame Size 60 mm Cable Outlet Direction Up

2D & 3D CAD

Product Name	Gear Ratio	Mass kg	2D CAD
AZM66MK-FC■UA	**7.2, 10, 20, 30**	2.2	B1320

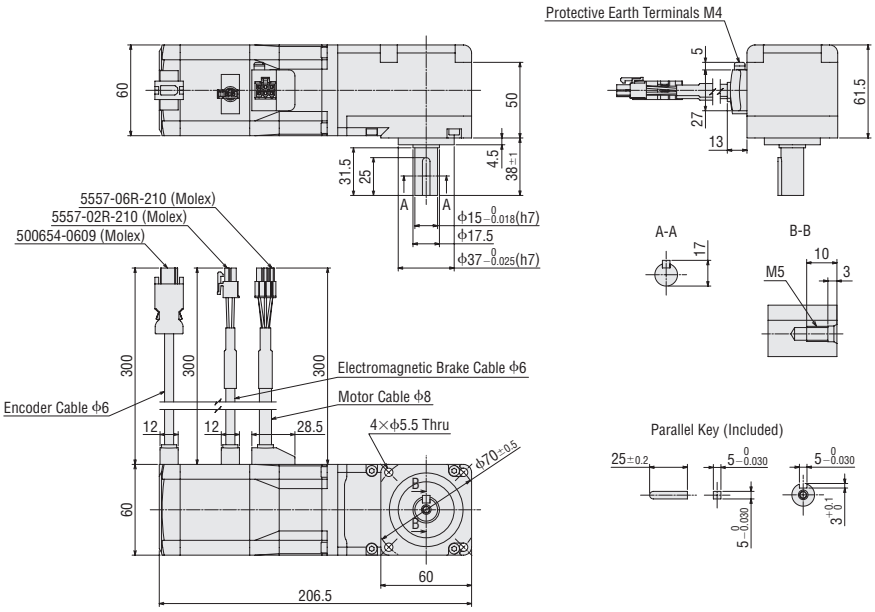

Frame Size 60 mm Cable Outlet Direction Down

2D & 3D CAD

Product Name	Gear Ratio	Mass kg	2D CAD
AZM66MK-FC■DA	**7.2, 10, 20, 30**	2.2	B1319

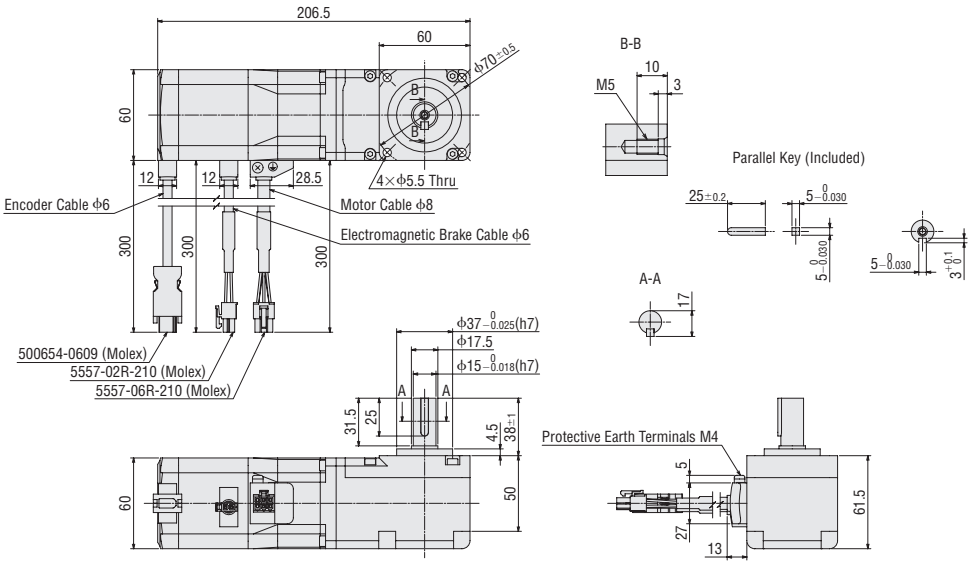

● A number indicating the gear ratio is specified where the box ■ is located in the product name.

◇**PS** Geared Type

Frame Size 28 mm

2D & 3D CAD

Product Name	Gear Ratio	Mass kg	2D CAD
AZM24AK-PS■	**7.2**, **10**	0.25	B1366

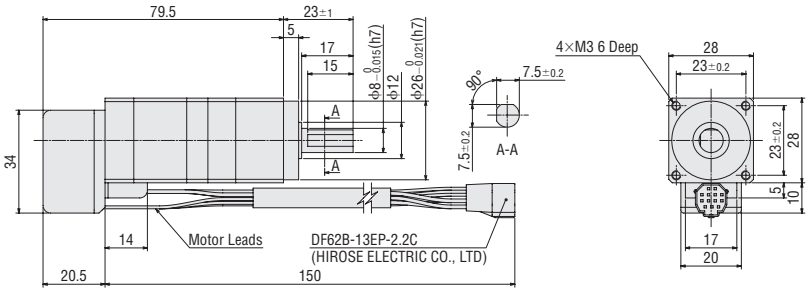

Frame Size 42 mm

2D & 3D CAD

Product Name	Gear Ratio	L	Mass kg	2D CAD
AZM46AK-PS■	**5**, **7.2**, **10**	98	0.64	B1159
	25, **36**, **50**	121.5	0.79	B1160

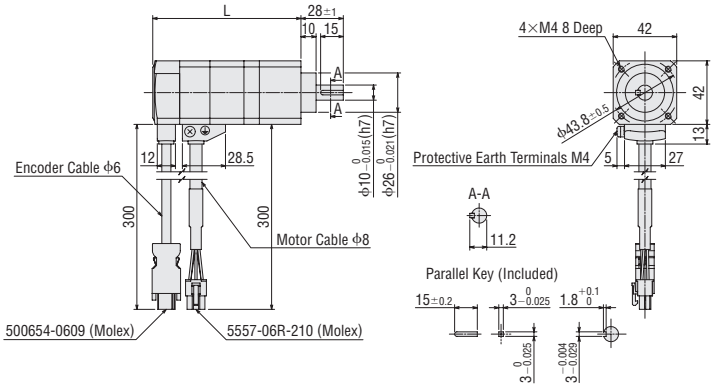

Frame Size 60 mm

2D & 3D CAD

Product Name	Gear Ratio	L	Mass kg	2D CAD
AZM66AK-PS■	**5**, **7.2**, **10**	104	1.3	B1161
	25, **36**, **50**	124	1.6	B1162

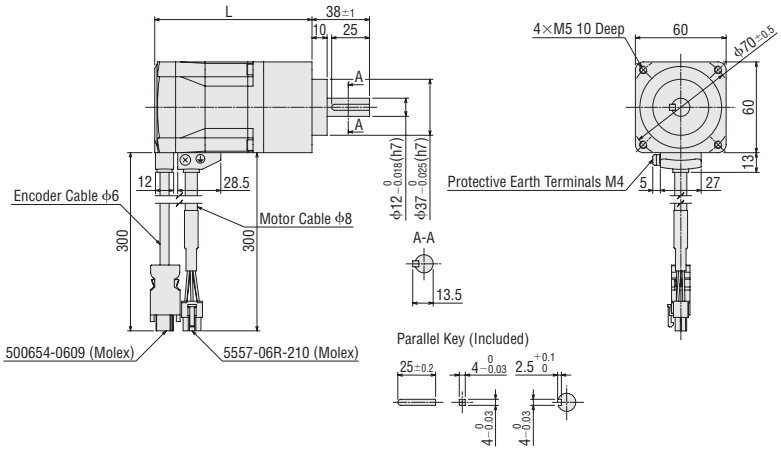

● A number indicating the gear ratio is specified where the box ■ is located in the product name.

◇**PS** Geared Type with Electromagnetic Brake

Frame Size 42 mm

2D & 3D CAD

Product Name	Gear Ratio	L	Mass kg	2D CAD
AZM46MK-PS■	**5, 7.2, 10**	129	0.81	B1218
	25, 36, 50	152	0.96	B1219

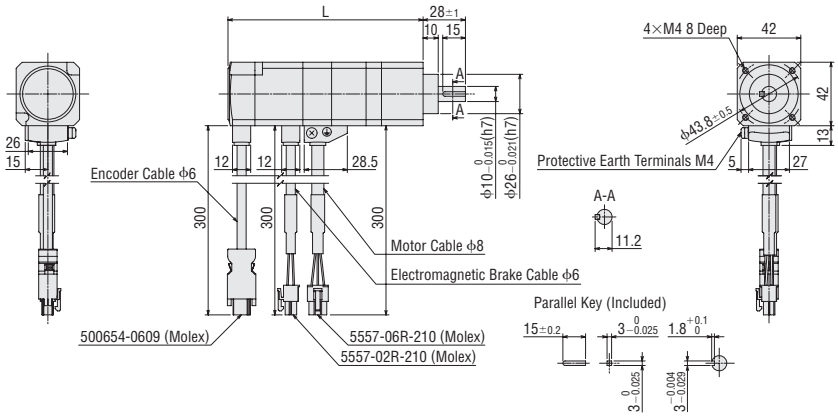

Frame Size 60 mm

2D & 3D CAD

Product Name	Gear Ratio	L	Mass kg	2D CAD
AZM66MK-PS■	**5, 7.2, 10**	150	1.7	B1220
	25, 36, 50	170	2.0	B1221

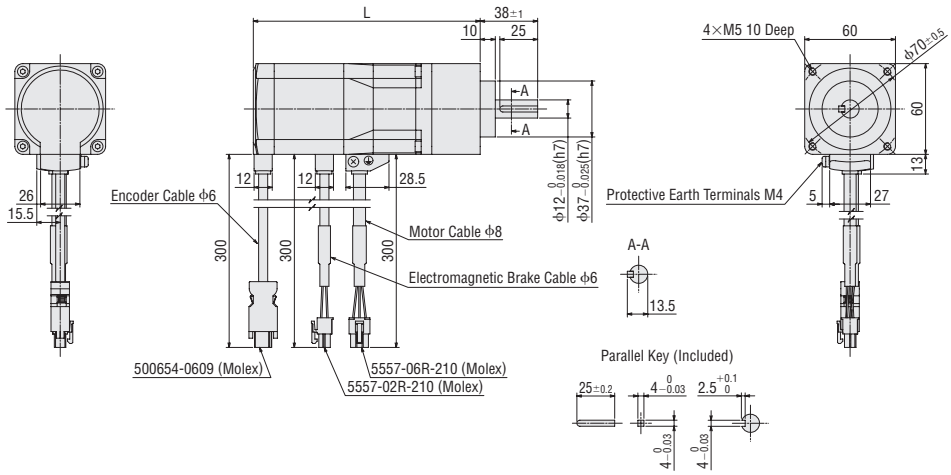

◇**HPG** Geared Type Shaft Output Type

Frame Size 40 mm

2D & 3D CAD

Product Name	Gear Ratio	Mass kg	2D CAD
AZM46AK-HP■	**5, 9**	0.71	B1163

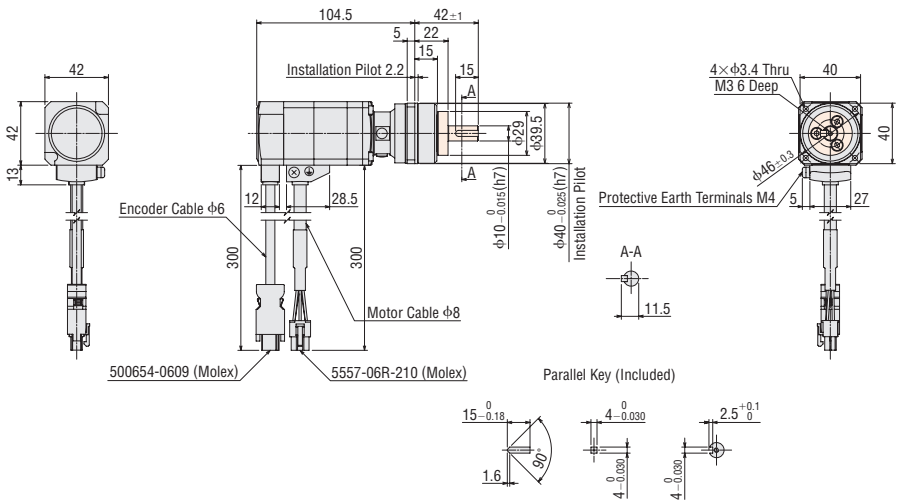

● The ▭ areas in the dimensions are rotating parts.
● A number indicating the gear ratio is specified where the box ■ is located in the product name.

Frame Size 60 mm

2D & 3D CAD

Product Name	Gear Ratio	Mass kg	2D CAD
AZM66AK-HP■	**5, 15**	1.9	B1165

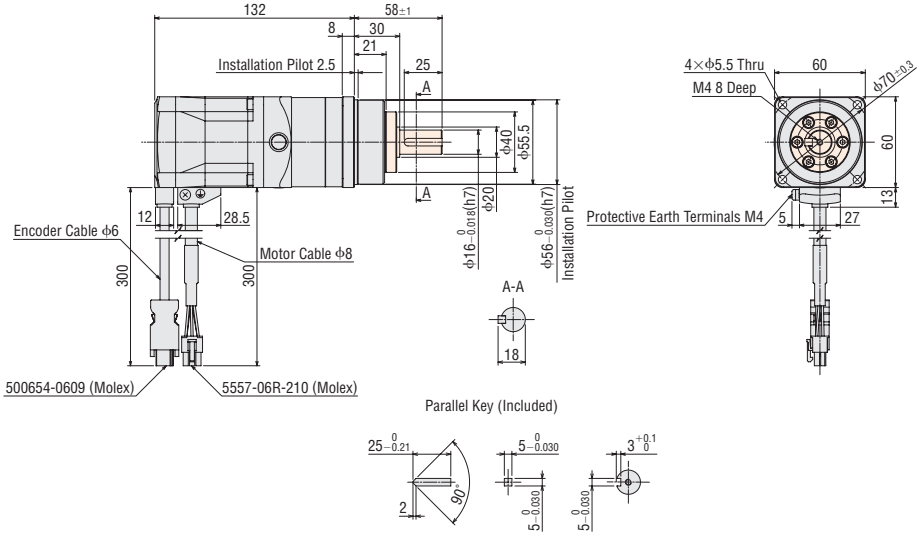

◇**HPG** Geared Type Flange Output Type

Frame Size 40 mm

2D & 3D CAD

Product Name	Gear Ratio	Mass kg	2D CAD
AZM46AK-HP■F	**5, 9**	0.66	B1164

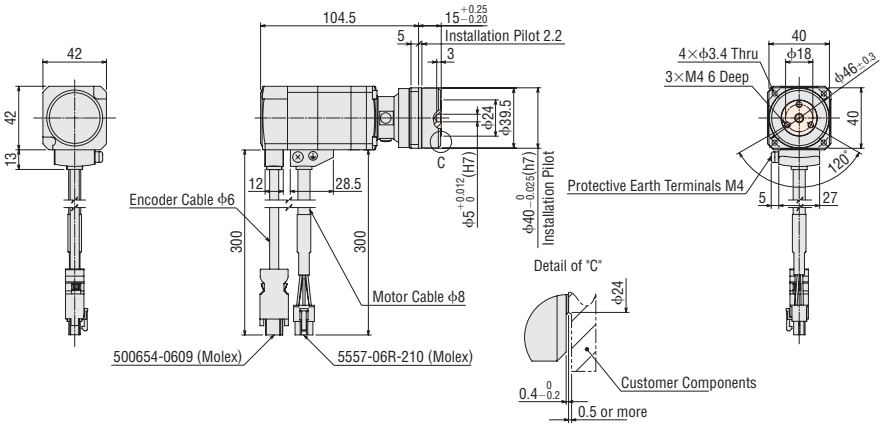

Frame Size 60 mm

2D & 3D CAD

Product Name	Gear Ratio	Mass kg	2D CAD
AZM66AK-HP■F	**5, 15**	1.8	B1166

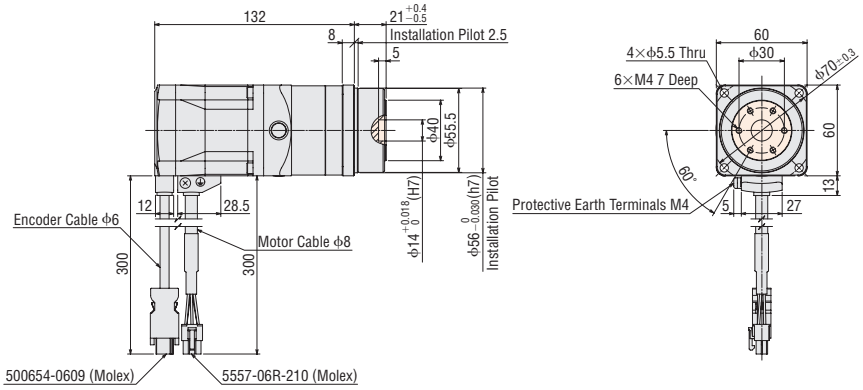

● The ▭ areas in the dimensions are rotating parts.

● A number indicating the gear ratio is specified where the box ■ is located in the product name.

◇HPG Geared Type with Electromagnetic Brake Shaft Output Type

Frame Size 40 mm

2D & 3D CAD

Product Name	Gear Ratio	Mass kg	2D CAD
AZM46MK-HP■	**5, 9**	0.88	B1222

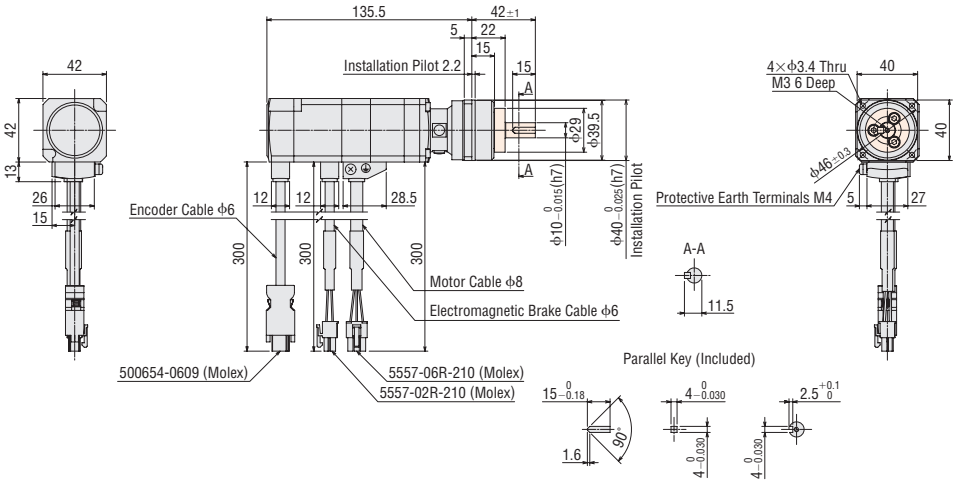

Frame Size 60 mm

2D & 3D CAD

Product Name	Gear Ratio	Mass kg	2D CAD
AZM66MK-HP■	**5, 15**	2.3	B1224

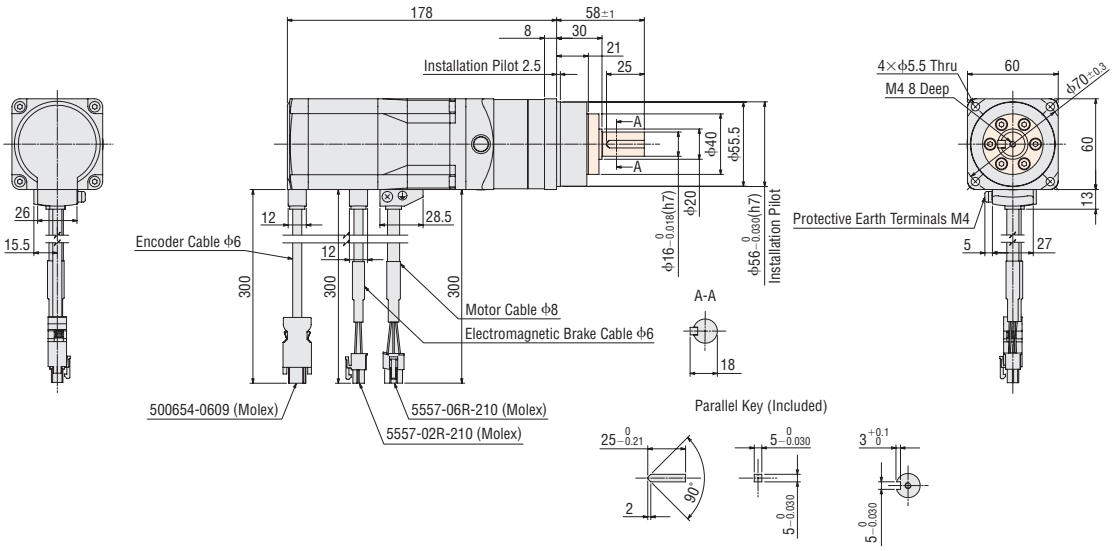

◇HPG Geared Type with Electromagnetic Brake Flange Output Type

Frame Size 40 mm

2D & 3D CAD

Product Name	Gear Ratio	Mass kg	2D CAD
AZM46MK-HP■F	**5, 9**	0.83	B1223

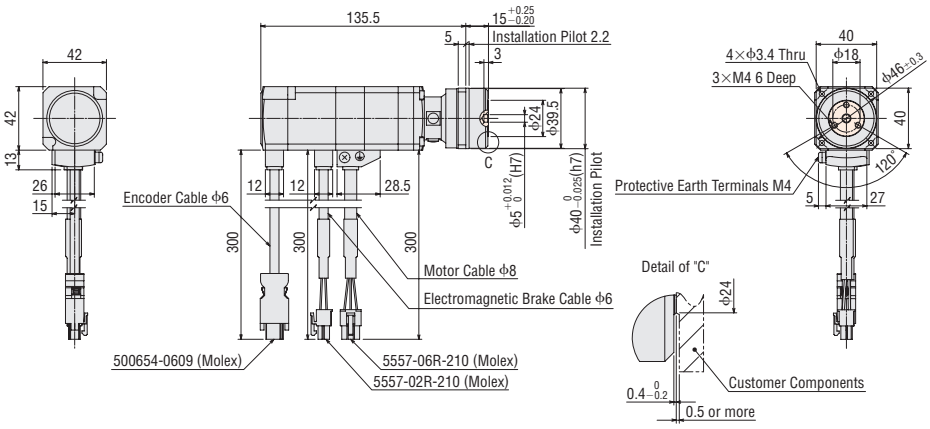

● The ▭ areas in the dimensions are rotating parts.

● A number indicating the gear ratio is specified where the box ■ is located in the product name.

Frame Size 60 mm

2D & 3D CAD

Product Name	Gear Ratio	Mass kg	2D CAD
AZM66MK-HP■F	**5, 15**	2.2	B1225

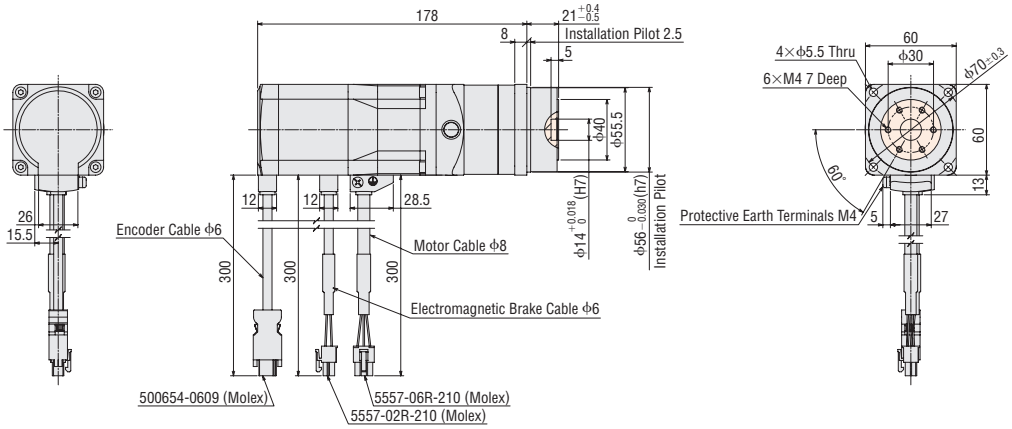

◇Harmonic Geared Type

Frame Size 30 mm

2D & 3D CAD

Product Name	Gear Ratio	Mass kg	2D CAD
AZM24AK-HS■	**50, 100**	0.24	B1367

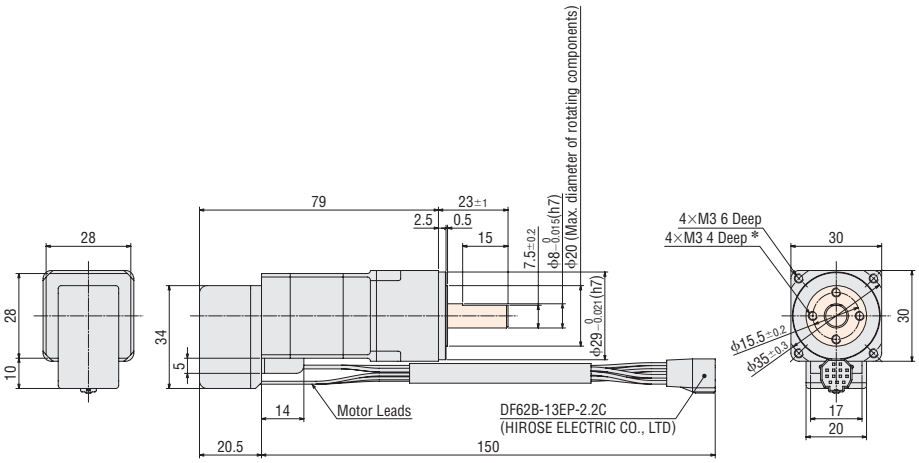

*The position of the output shaft relative to the screw holes on the rotating part cannot be specified. Adjust the position via the size of the screw holes on the load installation surface.

Frame Size 42 mm

2D & 3D CAD

Product Name	Gear Ratio	Mass kg	2D CAD
AZM46AK-HS■	**50, 100**	0.65	B1167

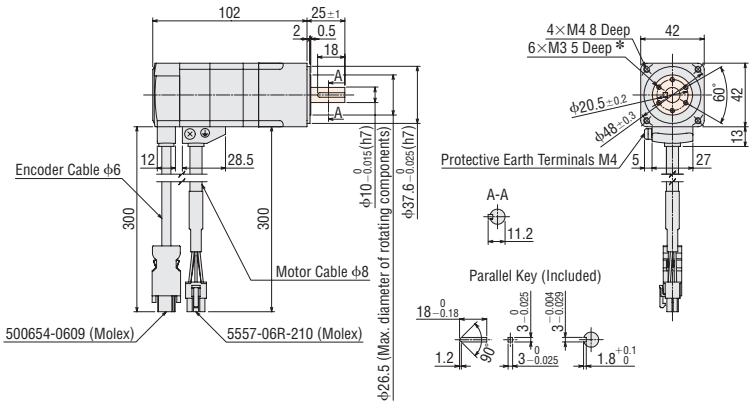

*The position of the output shaft relative to the screw holes on the rotating part cannot be specified. Adjust the position via the size of the screw holes on the load installation surface.

● The ▭ areas in the dimensions are rotating parts.
● A number indicating the gear ratio is specified where the box ■ is located in the product name.

Frame Size 60 mm

2D & 3D CAD

Product Name	Gear Ratio	Mass kg	2D CAD
AZM66AK-HS■	**50, 100**	1.4	B1168

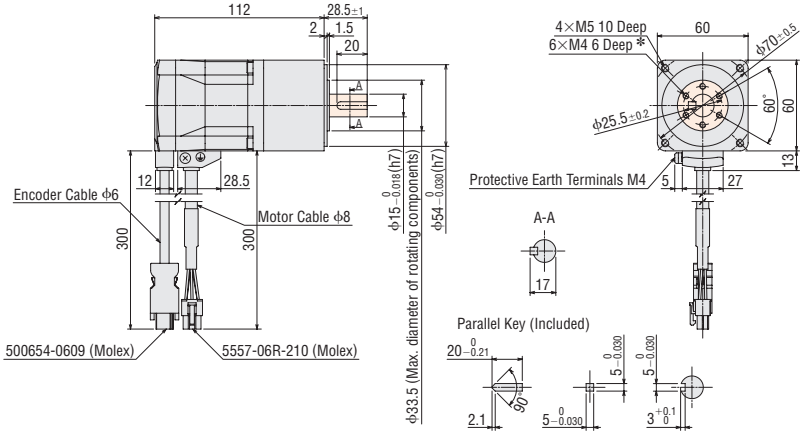

*The position of the output shaft relative to the screw holes on the rotating part cannot be specified. Adjust the position via the size of the screw holes on the load installation surface.

◇Harmonic Geared Type with an Electromagnetic Brake

Frame Size 42 mm

2D & 3D CAD

Product Name	Gear Ratio	Mass kg	2D CAD
AZM46MK-HS■	**50, 100**	0.82	B1226

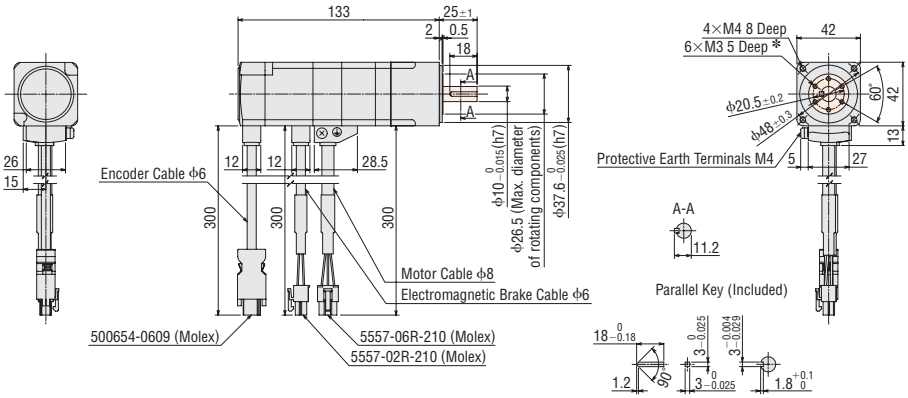

*The position of the output shaft relative to the screw holes on the rotating part cannot be specified. Adjust the position via the size of the screw holes on the load installation surface.

Frame Size 60 mm

2D & 3D CAD

Product Name	Gear Ratio	Mass kg	2D CAD
AZM66MK-HS■	**50, 100**	1.8	B1227

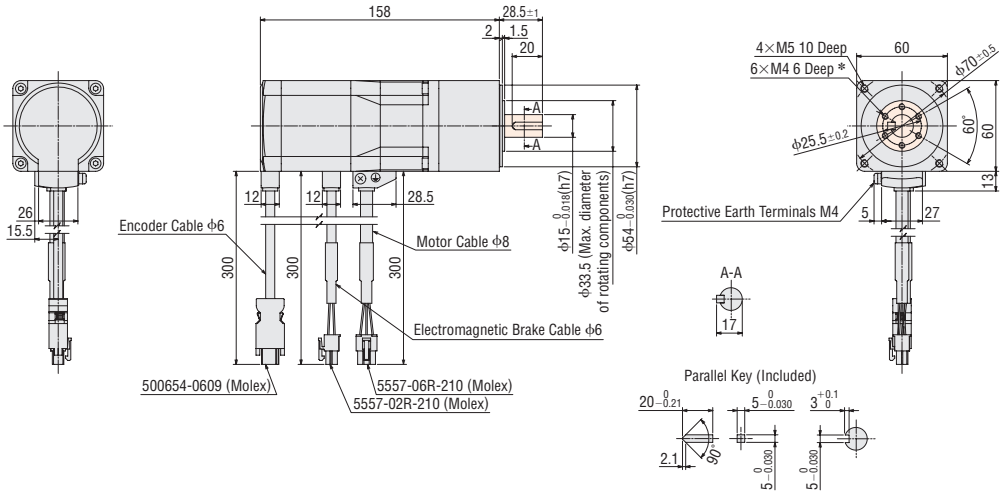

*The position of the output shaft relative to the screw holes on the rotating part cannot be specified. Adjust the position via the size of the screw holes on the load installation surface.

● The ▭ areas in the dimensions are rotating parts.
● A number indicating the gear ratio is specified where the box ■ is located in the product name.

Driver

2D & 3D CAD

Type	Product Name	Mass kg	2D CAD
Built-in Controller Type	**AZD-KD**	0.15	B1094
Pulse Input Type with RS-485 Communication	**AZD-KX**		
Pulse Input Type	**AZD-K**		B1096

● The dimensions are for the built-in controller type. The dimensions and included items are the same for all drivers in the table.

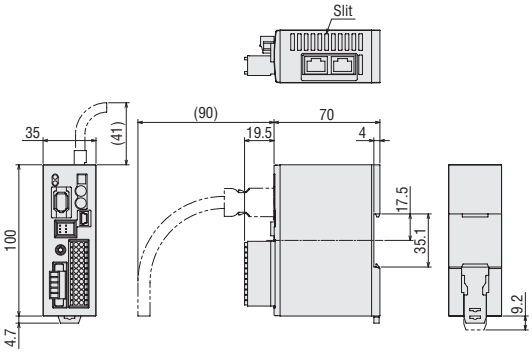

● Included Items
Main Power Supply / Electromagnetic Brake Connector (CN1)
Connector: MC1,5/5-STF-3,5
(PHOENIX CONTACT Inc.)

I/O Signals Connector (CN4)
Connector: DFMC1,5/12-ST-3,5
(PHOENIX CONTACT Inc.)

2D & 3D CAD

Type	Product Name	Mass kg	2D CAD
EtherNet/IP compatible	**AZD-KEP**	0.18	B1505
EtherCAT Drive Profile compatible	**AZD-KED**		
PROFINET compatible	**AZD-KPN**		

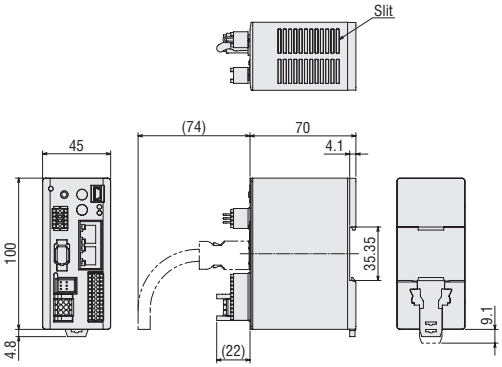

● Included Items
Control Power Connector (CN1)
Connector: DFMC0,5/5-ST-2,54 (PHOENIX CONTACT Inc.)

Main Power Connector (CN4)
Connector: DFMC1,5/3-ST-3,5-LR (PHOENIX CONTACT Inc.)

I/O Signals Connector (CN7)
Connector: DFMC0,5/12-ST-2,54 (PHOENIX CONTACT Inc.)

Connection and Operation

Names of Driver Parts

For details about each function, refer to the operating manual for the **AZ** Series. Either download operating manuals from the Oriental Motor website or contact your nearest Oriental Motor sales office.

◇Built-in Controller Type, Pulse Input Type with RS-485 Communication

The photos show the built-in controller type.

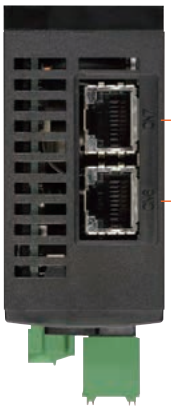

◇Pulse Input Type

◇EtherNet/IP compatible

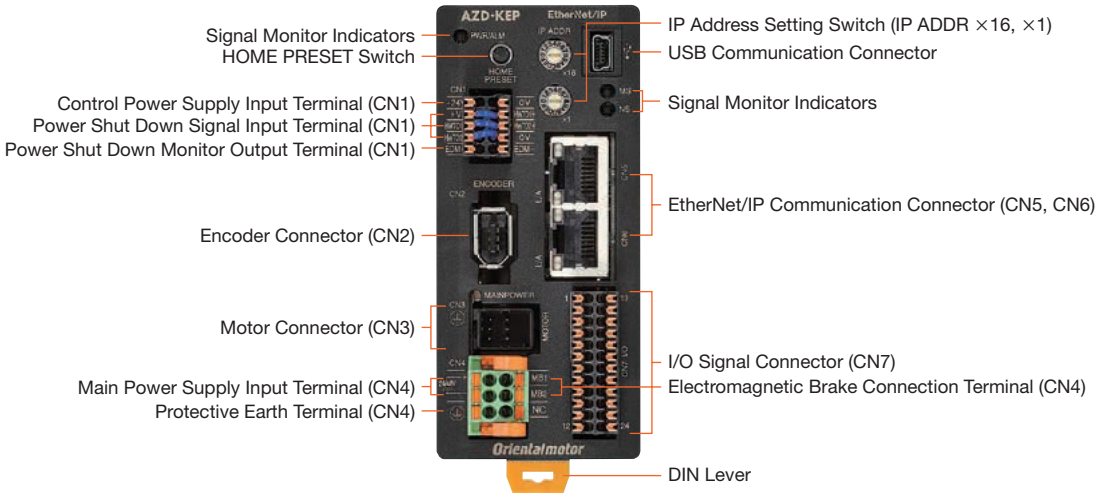

◇EtherCAT Drive Profile compatible

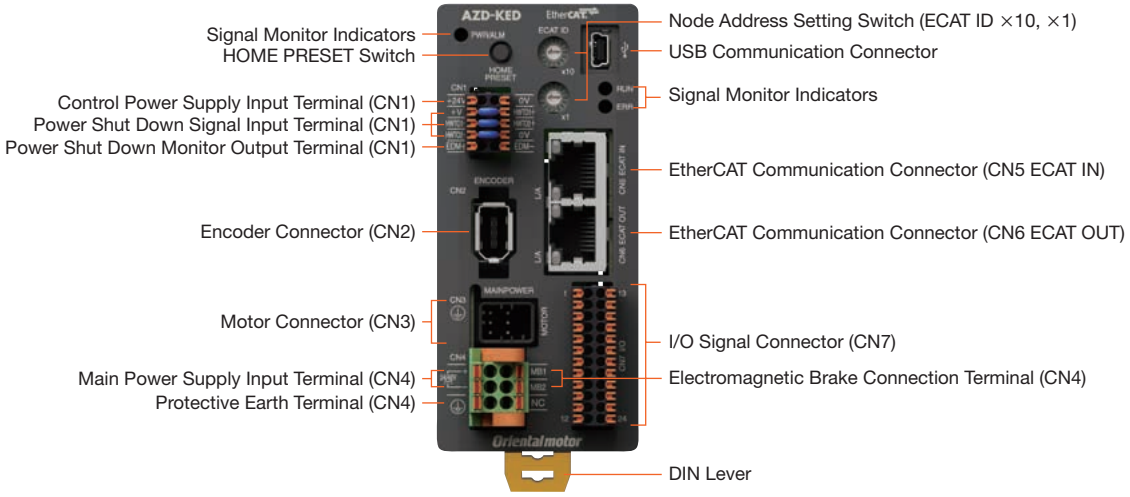

◇PROFINET compatible

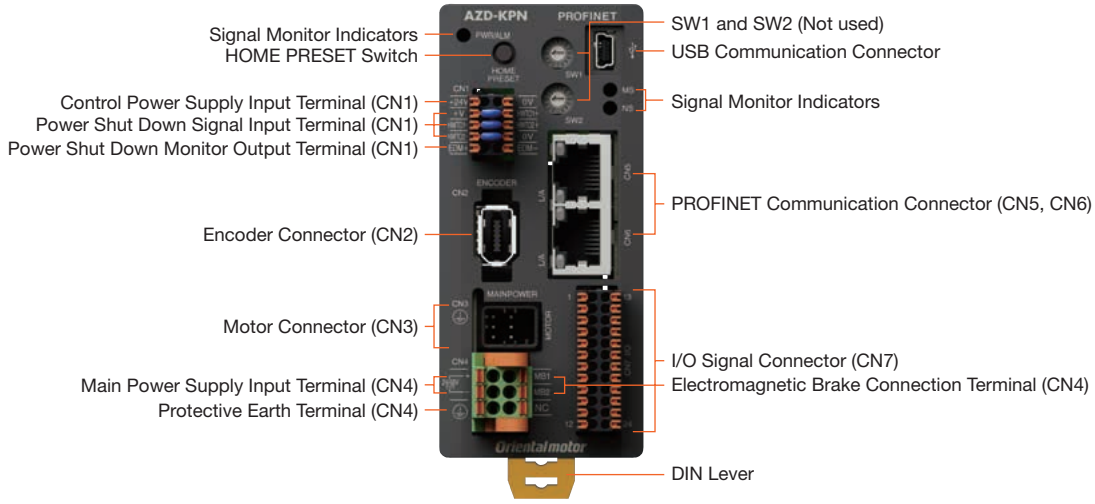

●USB Cable Connection

A USB cable is required for connecting the driver to the computer on which the support software **MEXE02** is installed.
Use a USB cable with the following specifications.

Specifications	USB 2.0 (Full Speed)
Cables	Length: 3 m or less Configuration: A to mini B

●Connection Diagrams

◇Built-in Controller Type

•Diagram for Connection with Current Sink Output Circuit

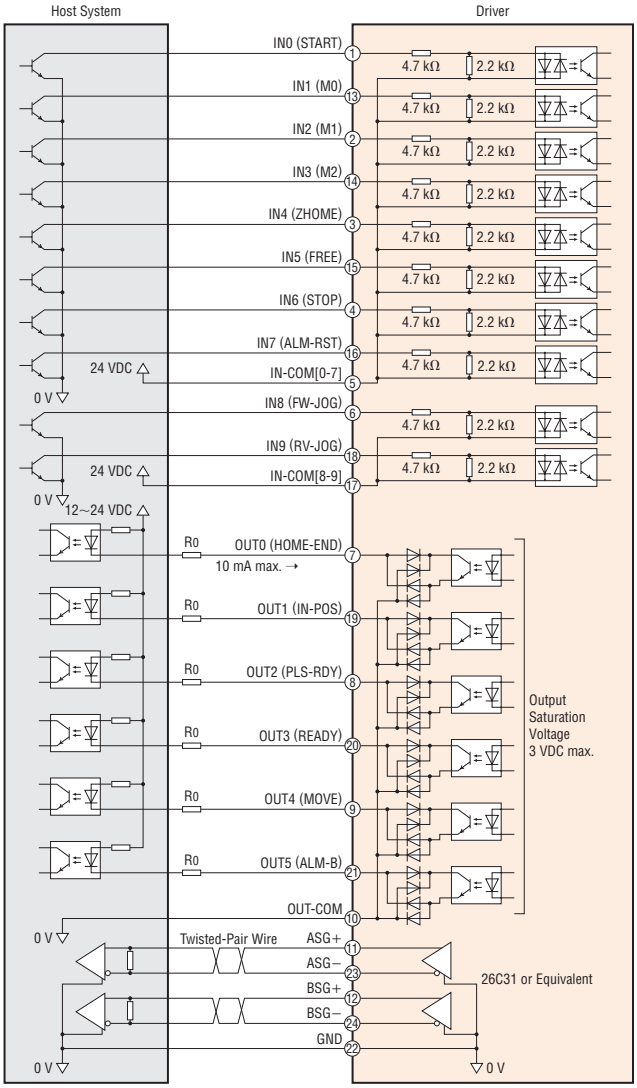

Note

- Use 24 VDC for the input signals.
- Use output signal at 12~24 VDC 10 mA or less. When the current value exceeds 10 mA, connect an external resistor R_0 to reduce the current to 10 mA or less.
- Provide a distance of 200 mm or more between the signal lines and power lines (power supply lines, motor lines).
  Do not run the signal lines in the same piping as power lines or bundle them with power lines.
- If noise generated by the motor cable or power supply cable causes a problem with the specific wiring or layout, shield the cable or use ferrite cores.

•Diagram for Connection with Current Source Output Circuit

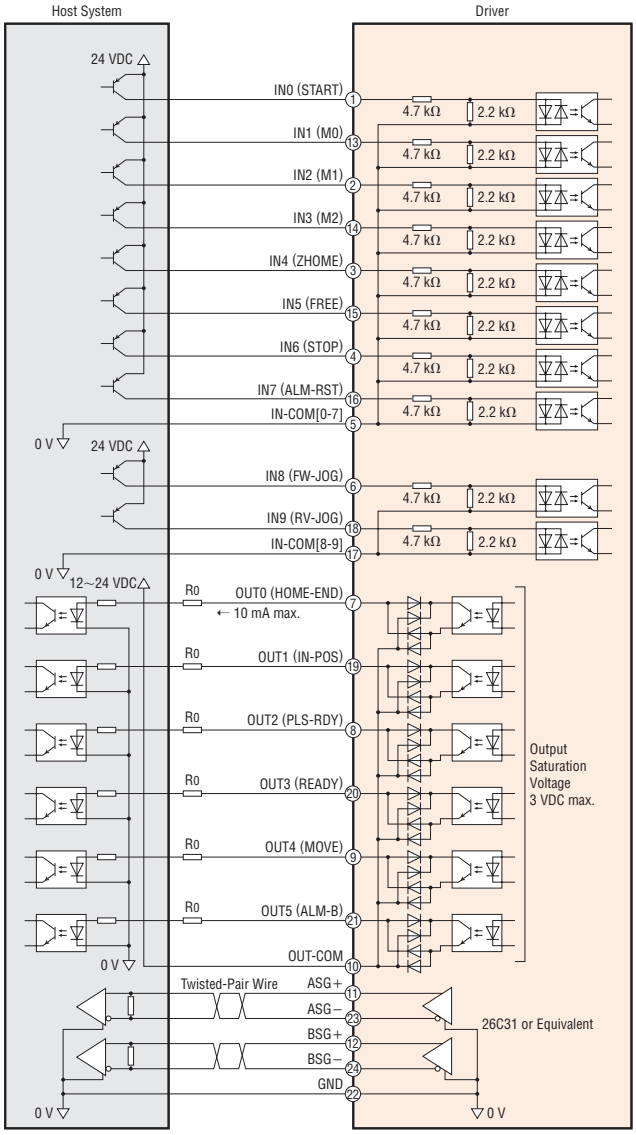

Note

- Use 24 VDC for the input signals.
- Use output signal at 12~24 VDC 10 mA or less. When the current value exceeds 10 mA, connect an external resistor R_0 to reduce the current to 10 mA or less.
- Provide a distance of 200 mm or more between the signal lines and power lines (power supply lines, motor lines).
  Do not run the signal lines in the same piping as power lines or bundle them with power lines.
- If noise generated by the motor cable or power supply cable causes a problem with the specific wiring or layout, shield the cable or use ferrite cores.

◇Pulse Input Type with RS-485 Communication, Pulse Input Type

•Diagram for Connection with Current Sink Output Circuit

When the pulse input is the line driver

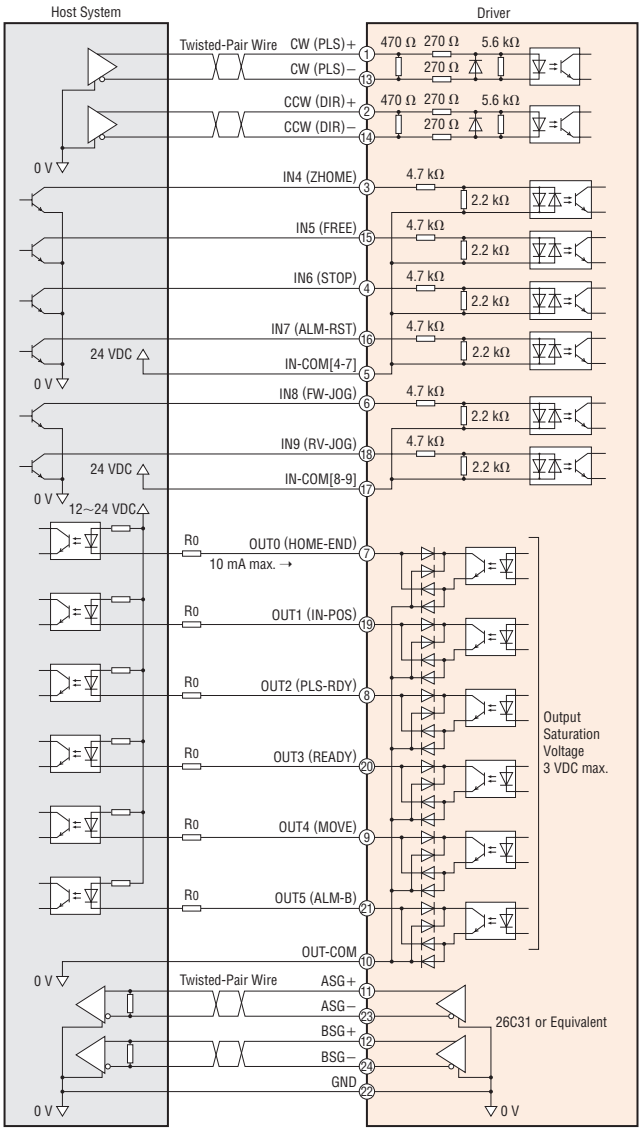

Note

- Use 24 VDC for the input signals.
- Use output signal at 12~24 VDC 10 mA or less. When the current value exceeds 10 mA, connect an external resistor R_0 to reduce the current to 10 mA or less.
- Provide a distance of 200 mm or more between the signal lines and power lines (power supply lines, motor lines).
  Do not run the signal lines in the same piping as power lines or bundle them with power lines.
- If noise generated by the motor cable or power supply cable causes a problem with the specific wiring or layout, shield the cable or use ferrite cores.

When the pulse input is open collector

•When the pulse input signal is 5 VDC

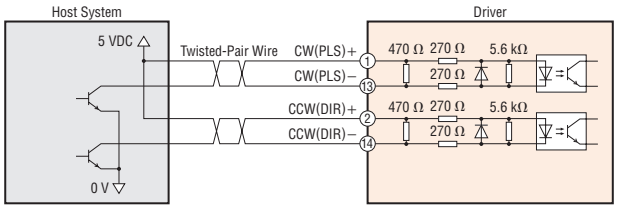

•When the pulse input signal is 24 VDC

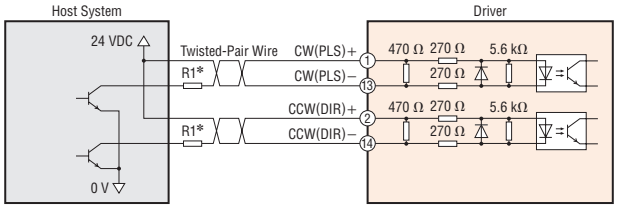

*R_1: 1.2 kΩ~2.2 kΩ 0.5 W min.

Note

- Use 5~24 VDC for CW (PLS) input and CCW (DIR) input. If used at 24 VDC, connect external resistor R_1 (1.2 kΩ~2.2 kΩ 0.5 W min.)
- If used at 5 VDC, connect the pulse input signal directly without connecting an external resistor.

•Diagram for Connection with Current Source Output Circuit

When the pulse input is the line driver

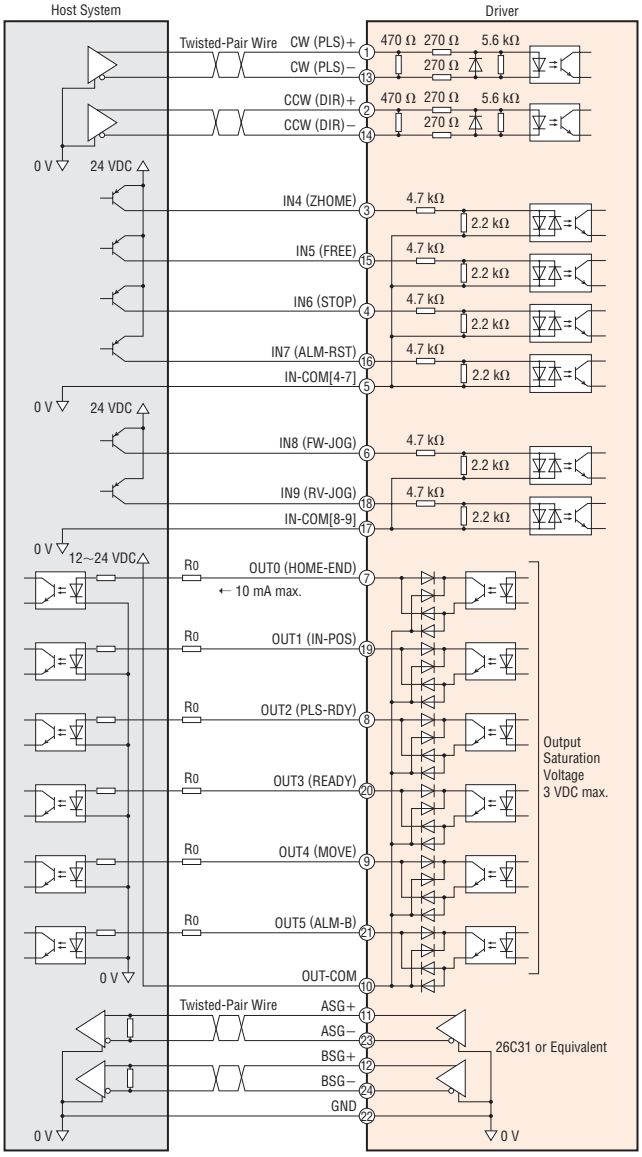

Note

- Use 24 VDC for the input signals.
- Use output signal at 12~24 VDC 10 mA or less. When the current value exceeds 10 mA, connect an external resistor R_0 to reduce the current to 10 mA or less.
- Provide a distance of 200 mm or more between the signal lines and power lines (power supply lines, motor lines).
  Do not run the signal lines in the same piping as power lines or bundle them with power lines.
- If noise generated by the motor cable or power supply cable causes a problem with the specific wiring or layout, shield the cable or use ferrite cores.

When the pulse input is open collector

•When the pulse input signal is 5 VDC

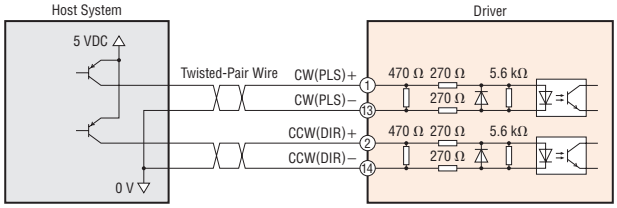

•When the pulse input signal is 24 VDC

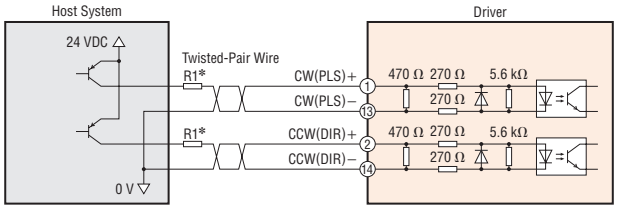

*R_1: 1.2 kΩ~2.2 kΩ 0.5 W min.

Note

- Use 5~24 VDC for CW (PLS) input and CCW (DIR) input. If used at 24 VDC, connect external resistor R_1 (1.2 kΩ~2.2 kΩ 0.5 W min.)
- If used at 5 VDC, connect the pulse input signal directly without connecting an external resistor.

◇EtherNet/IP compatible

• Diagram for Connection with Current Sink Output Circuit

When the pulse input is the line driver

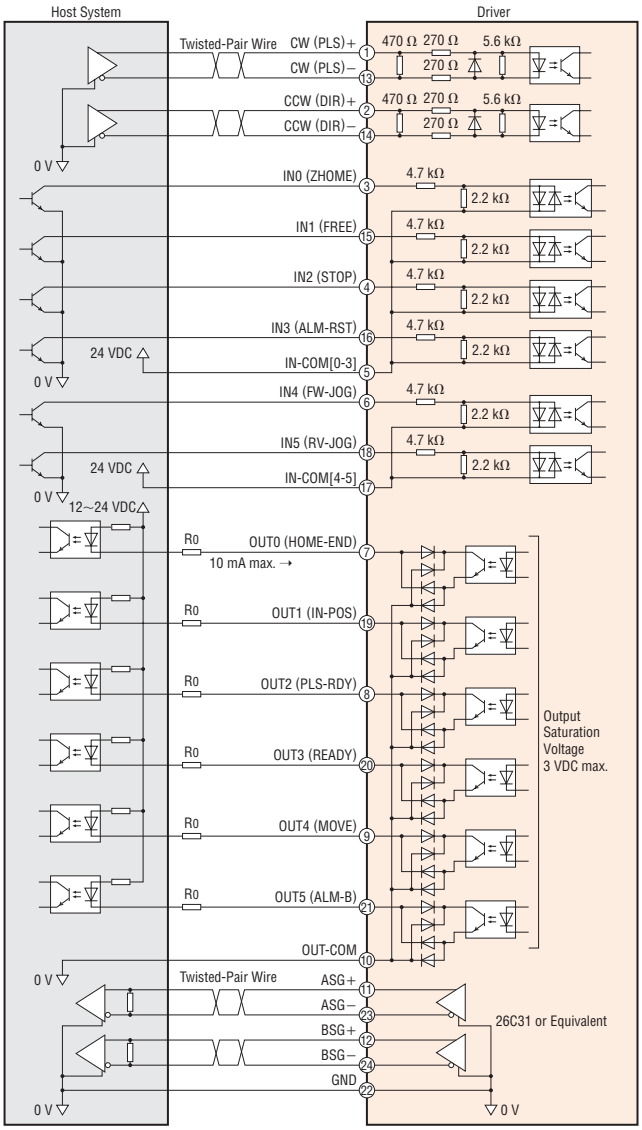

Note

- Use 24 VDC for the input signals.
- Use output signal at 12~24 VDC 10 mA or less. When the current value exceeds 10 mA, connect an external resistor R_0 to reduce the current to 10 mA or less.
- Provide a distance of 200 mm or more between the signal lines and power lines (power supply lines, motor lines).
  Do not run the signal lines in the same piping as power lines or bundle them with power lines.
- If noise generated by the motor cable or power supply cable causes a problem with the specific wiring or layout, shield the cable or use ferrite cores.

When the pulse input is open collector

• When the pulse input signal is 5 VDC

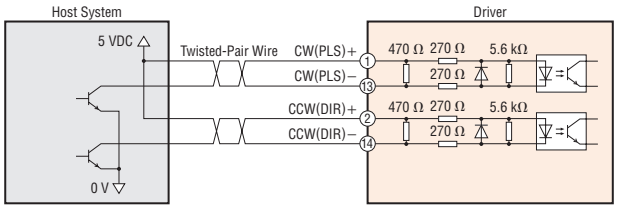

• When the pulse input signal is 24 VDC

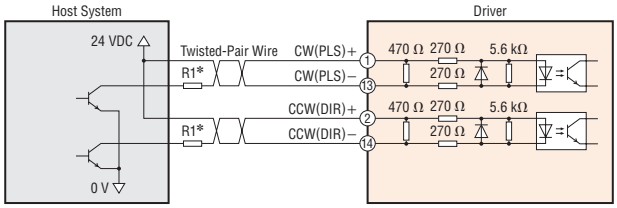

*R_1: 1.2 kΩ~2.2 kΩ 0.5 W min.

Note

- Use 5~24 VDC for CW (PLS) input and CCW (DIR) input. If used at 24 VDC, connect external resistor R_1 (1.2 kΩ~2.2 kΩ 0.5 W min.)
- If used at 5 VDC, connect the pulse input signal directly without connecting an external resistor.

•Diagram for Connection with Current Source Output Circuit

When the pulse input is the line driver

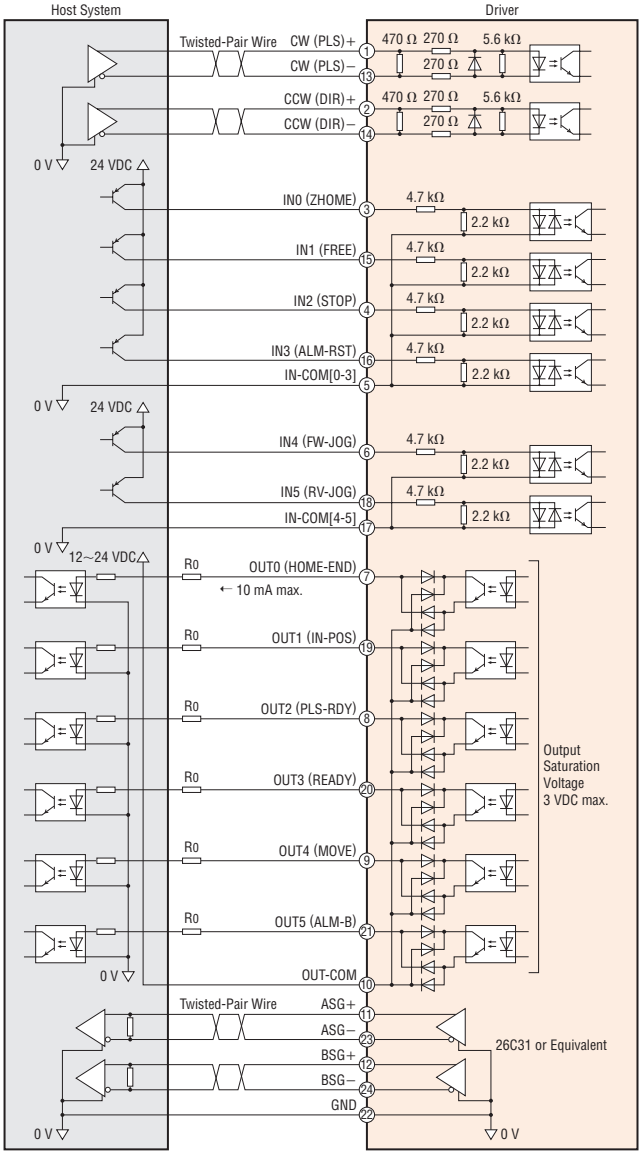

Note

- Use 24 VDC for the input signals.
- Use output signal at 12~24 VDC 10 mA or less. When the current value exceeds 10 mA, connect an external resistor R_0 to reduce the current to 10 mA or less.
- Provide a distance of 200 mm or more between the signal lines and power lines (power supply lines, motor lines). Do not run the signal lines in the same piping as power lines or bundle them with power lines.
- If noise generated by the motor cable or power supply cable causes a problem with the specific wiring or layout, shield the cable or use ferrite cores.

When the pulse input is open collector

•When the pulse input signal is 5 VDC

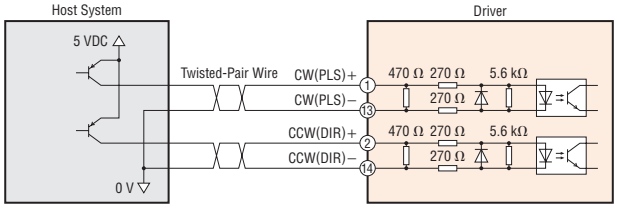

•When the pulse input signal is 24 VDC

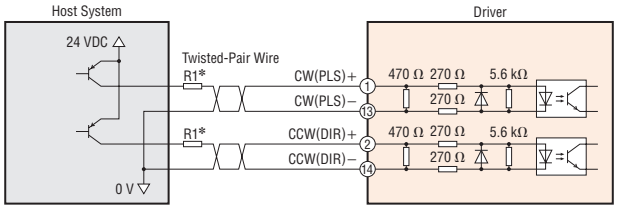

*R_1: 1.2 kΩ~2.2 kΩ 0.5 W min.

Note

- Use 5~24 VDC for CW (PLS) input and CCW (DIR) input. If used at 24 VDC, connect external resistor R_1 (1.2 kΩ~2.2 kΩ 0.5 W min.)
- If used at 5 VDC, connect the pulse input signal directly without connecting an external resistor.

◇EtherCAT Drive Profile compatible

• Diagram for Connection with Current Sink Output Circuit

When the pulse input is the line driver

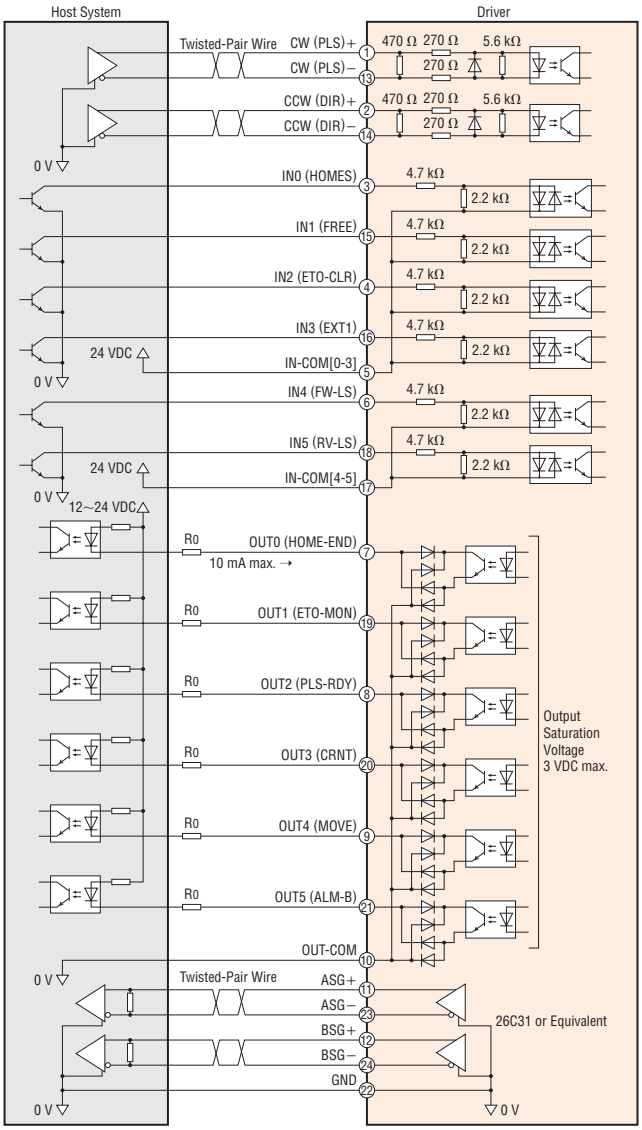

Note

- Use 24 VDC for the input signals.
- Use output signal at 12~24 VDC 10 mA or less. When the current value exceeds 10 mA, connect an external resistor R_0 to reduce the current to 10 mA or less.
- Provide a distance of 200 mm or more between the signal lines and power lines (power supply lines, motor lines). Do not run the signal lines in the same piping as power lines or bundle them with power lines.
- If noise generated by the motor cable or power supply cable causes a problem with the specific wiring or layout, shield the cable or use ferrite cores.

When the pulse input is open collector

• When the pulse input signal is 5 VDC

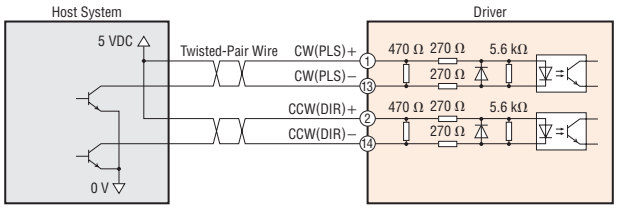

• When the pulse input signal is 24 VDC

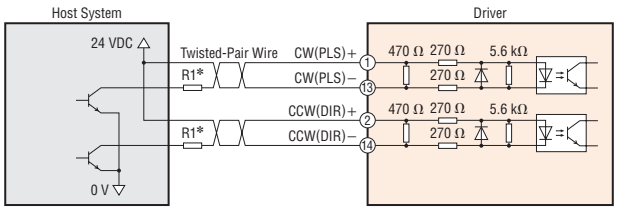

*R_1: 1.2 kΩ~2.2 kΩ 0.5 W min.

Note

- Use 5~24 VDC for CW (PLS) input and CCW (DIR) input. If used at 24 VDC, connect external resistor R_1 (1.2 kΩ~2.2 kΩ 0.5 W min.)
- If used at 5 VDC, connect the pulse input signal directly without connecting an external resistor.

•Diagram for Connection with Current Source Output Circuit

When the pulse input is the line driver

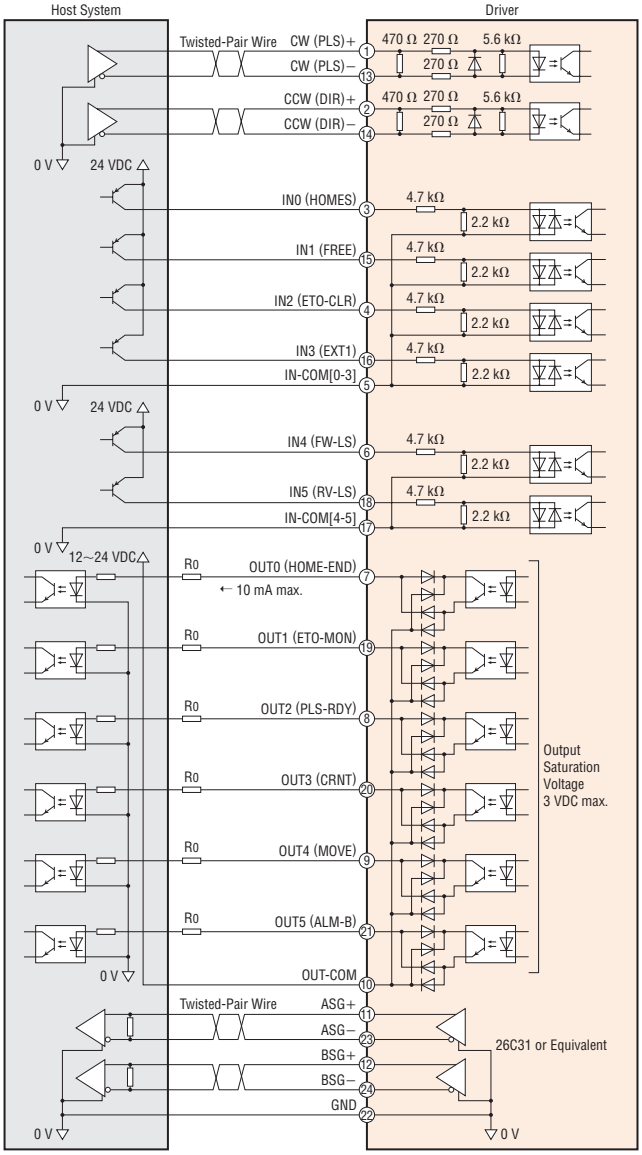

Note

- Use 24 VDC for the input signals.
- Use output signal at 12~24 VDC 10 mA or less. When the current value exceeds 10 mA, connect an external resistor R_0 to reduce the current to 10 mA or less.
- Provide a distance of 200 mm or more between the signal lines and power lines (power supply lines, motor lines). Do not run the signal lines in the same piping as power lines or bundle them with power lines.
- If noise generated by the motor cable or power supply cable causes a problem with the specific wiring or layout, shield the cable or use ferrite cores.

When the pulse input is open collector

•When the pulse input signal is 5 VDC

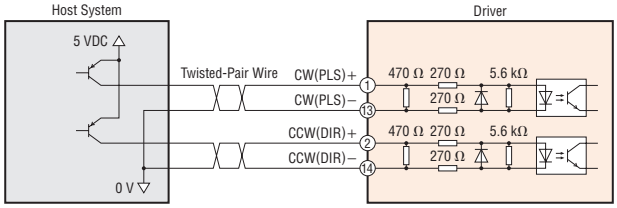

•When the pulse input signal is 24 VDC

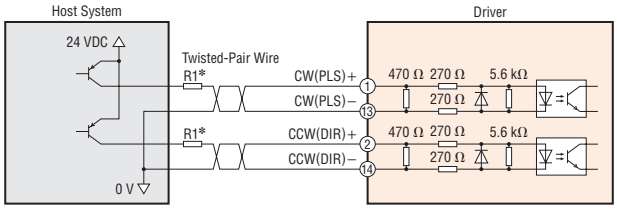

*R_1: 1.2 kΩ~2.2 kΩ 0.5 W min.

Note

- Use 5~24 VDC for CW (PLS) input and CCW (DIR) input. If used at 24 VDC, connect external resistor R_1 (1.2 kΩ~2.2 kΩ 0.5 W min.)
- If used at 5 VDC, connect the pulse input signal directly without connecting an external resistor.

◇PROFINET compatible

• Diagram for Connection with Current Sink Output Circuit

When the pulse input is the line driver

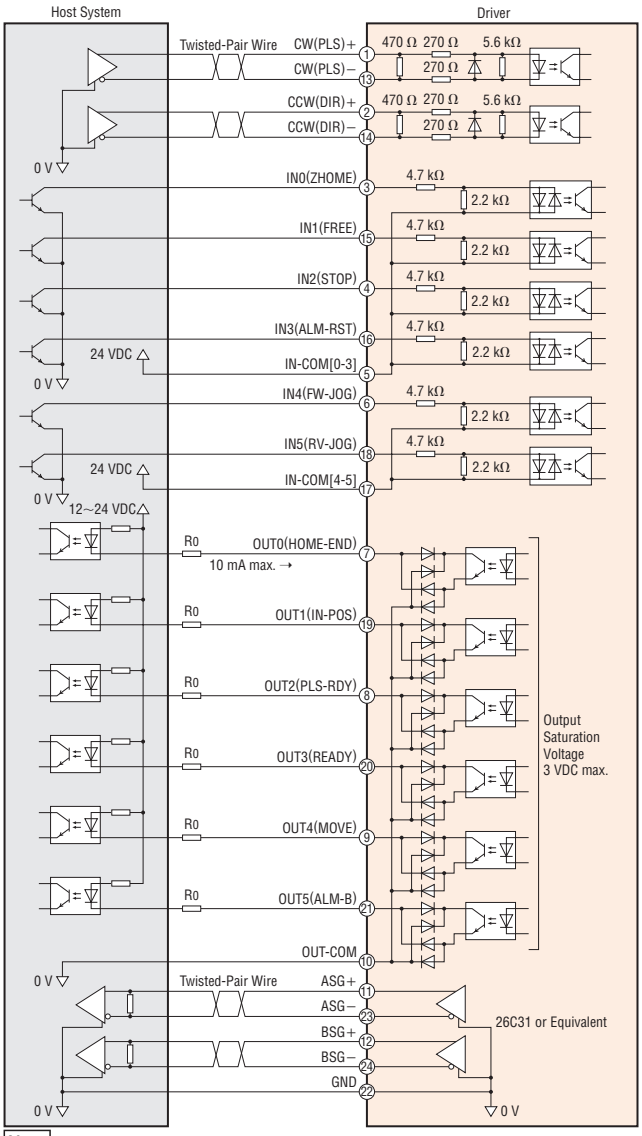

Note

- Use 24 VDC for the input signals.
- Use output signal at 12~24 VDC 10 mA or less. When the current value exceeds 10 mA, connect an external resistor R_0 to reduce the current to 10 mA or less.
- Provide a distance of 200 mm or more between the signal lines and power lines (power supply lines, motor lines). Do not run the signal lines in the same piping as power lines or bundle them with power lines.
- If noise generated by the motor cable or power supply cable causes a problem with the specific wiring or layout, shield the cable or use ferrite cores.

When the pulse input is open collector

• When the pulse input signal is 5 VDC

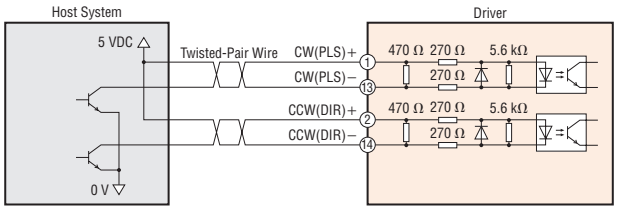

• When the pulse input signal is 24 VDC

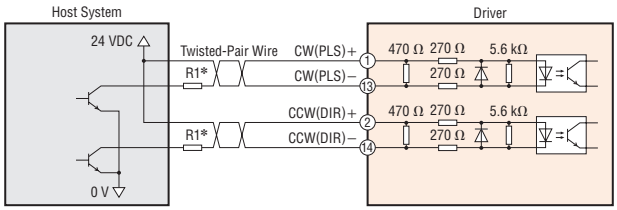

*R1: 1.2 kΩ~2.2 kΩ 0.5 W min.

Note

- Use 5~24 VDC for CW (PLS) input and CCW (DIR) input. If used at 24 VDC, connect external resistor R_1 (1.2 kΩ~2.2 kΩ 0.5 W min.)
- If used at 5 VDC, connect the pulse input signal directly without connecting an external resistor.

•Diagram for Connection with Current Source Output Circuit

When the pulse input is the line driver

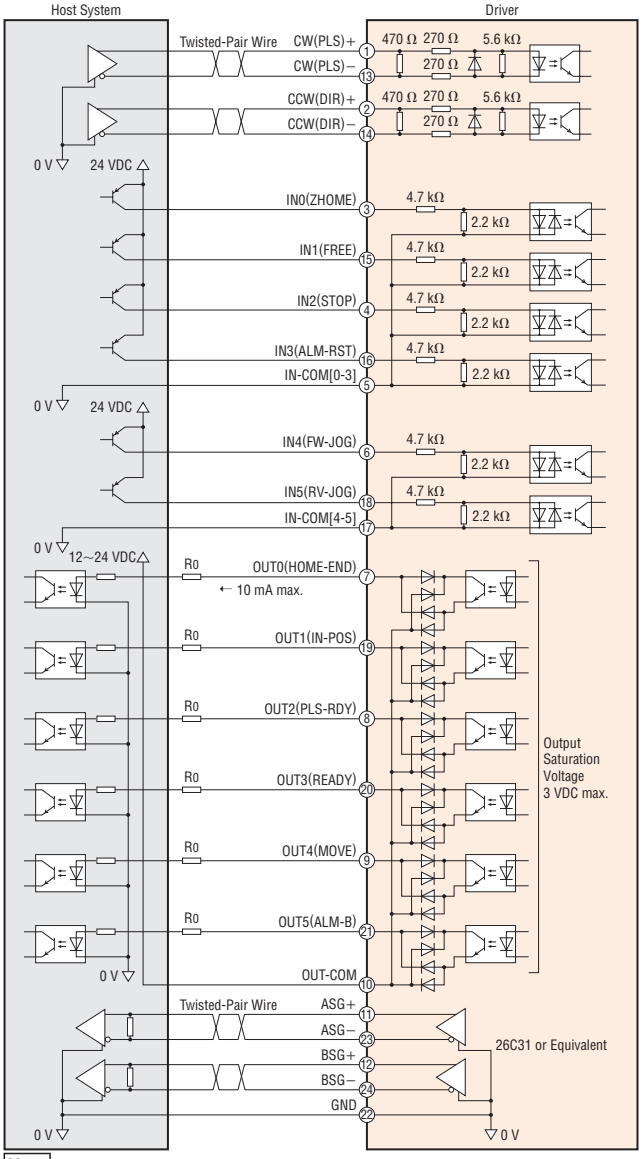

Note

- Use 24 VDC for the input signals.
- Use output signal at 12~24 VDC 10 mA or less. When the current value exceeds 10 mA, connect an external resistor R_0 to reduce the current to 10 mA or less.
- Provide a distance of 200 mm or more between the signal lines and power lines (power supply lines, motor lines). Do not run the signal lines in the same piping as power lines or bundle them with power lines.
- If noise generated by the motor cable or power supply cable causes a problem with the specific wiring or layout, shield the cable or use ferrite cores.

When the pulse input is open collector

•When the pulse input signal is 5 VDC

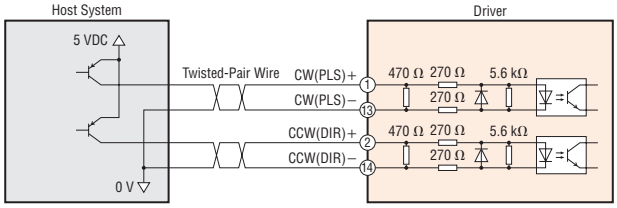

•When the pulse input signal is 24 VDC

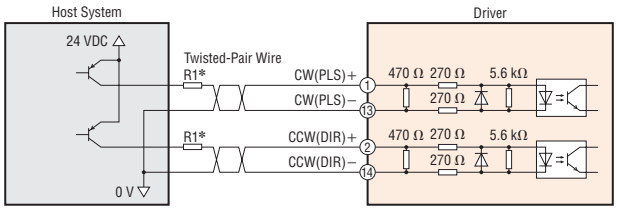

*R1: 1.2 kΩ~2.2 kΩ 0.5 W min.

Note

- Use 5~24 VDC for CW (PLS) input and CCW (DIR) input. If used at 24 VDC, connect external resistor R_1 (1.2 kΩ~2.2 kΩ 0.5 W min.)
- If used at 5 VDC, connect the pulse input signal directly without connecting an external resistor.

Cables

Example of Cable System Configuration (For AC Input)

Built-in Controller Type Driver, Pulse Input Type Driver with RS-485 Communication

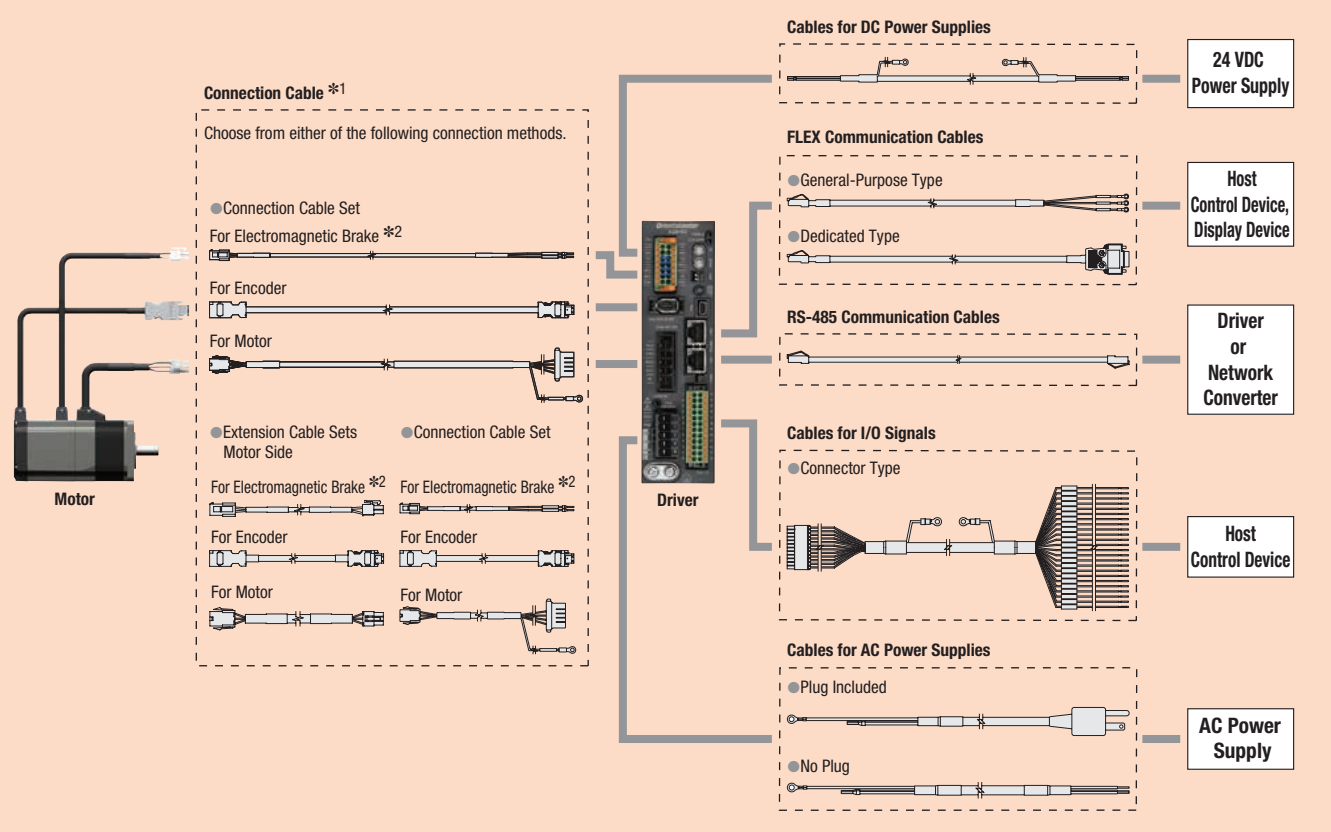

*1 Flexible connection cable sets and flexible extension cable sets with excellent durability are also available.
*2 Required for motors with an electromagnetic brake.

Note
- Up to three cables can be used to connect the motor and the driver.
- The maximum extension distance between the motor and driver is 20 m.
- The motor cable and electromagnetic brake cable from the motor cannot be connected directly to the driver. When connecting to a driver, use a connection cable.

Pulse Input Type Driver

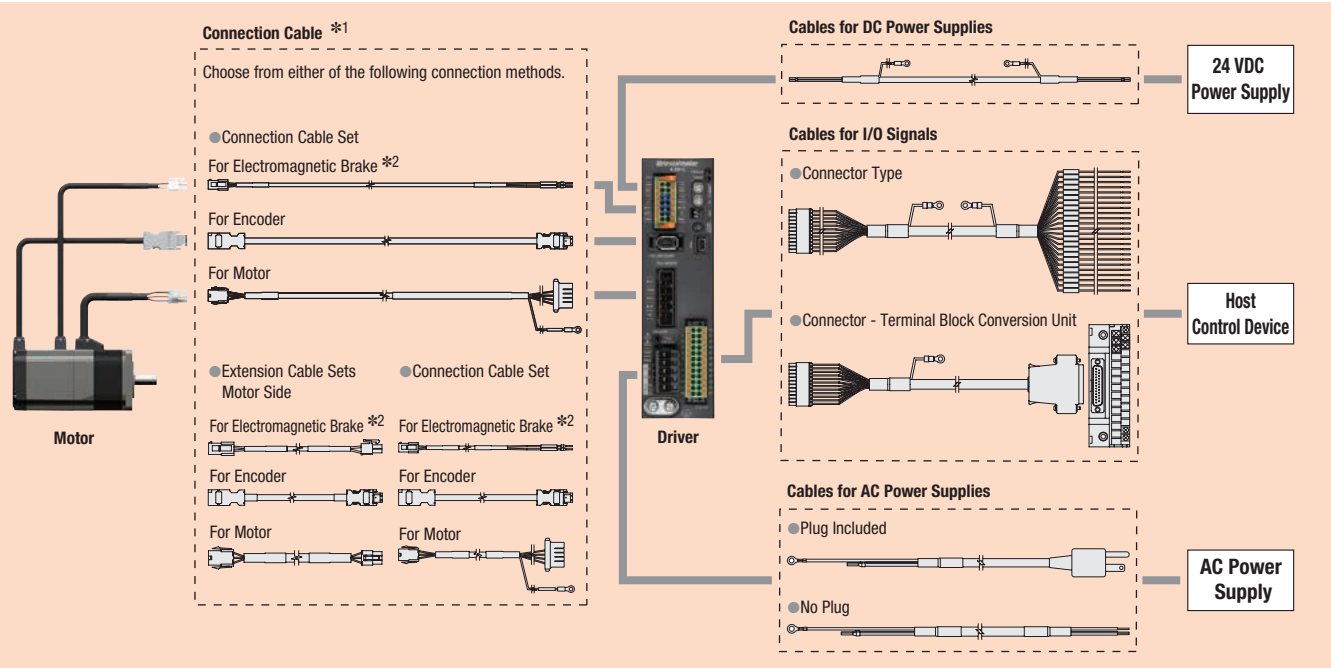

*1 Flexible connection cable sets and flexible extension cable sets with excellent durability are also available.
*2 Required for motors with an electromagnetic brake.

Note
- Up to three cables can be used to connect the motor and the driver.
- The maximum extension distance between the motor and driver is 20 m.
- The motor cable and electromagnetic brake cable from the motor cannot be connected directly to the driver. When connecting to a driver, use a connection cable.

●Network Compatible Driver

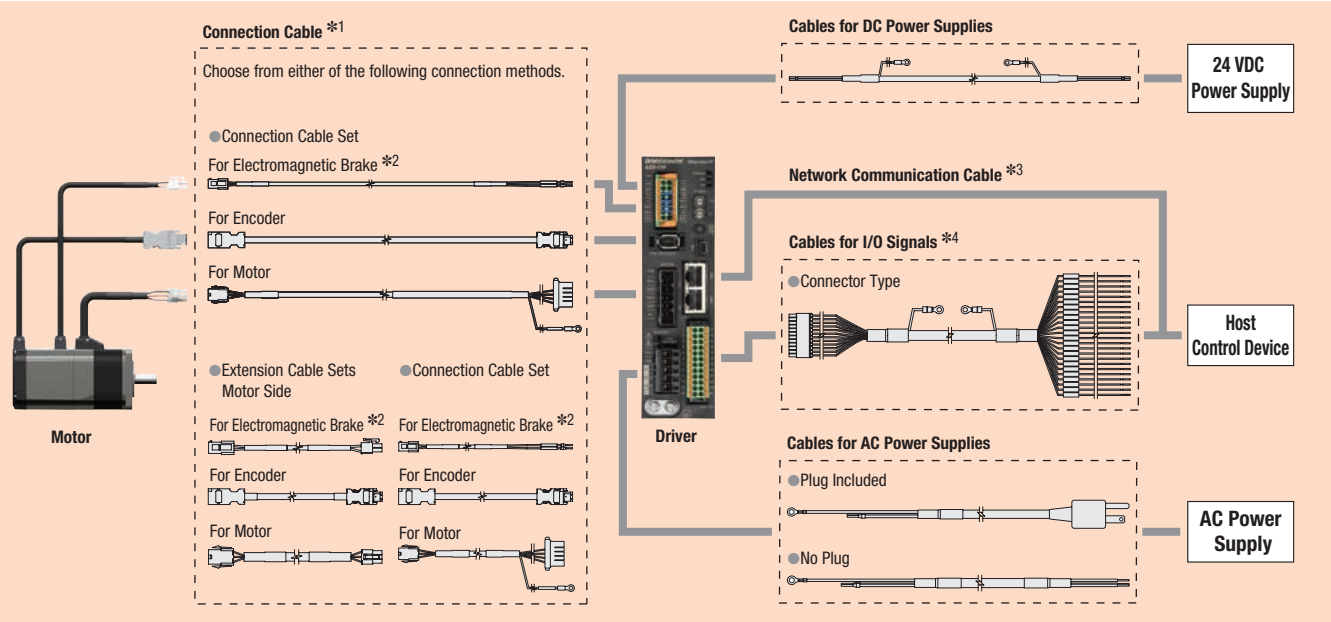

*1 Flexible connection cable sets and flexible extension cable sets with excellent durability are also available.
*2 Required for motors with an electromagnetic brake.
*3 Not supplied.
*4 When using a MECHATROLINK-Ⅲ compatible driver or an SSCNETⅢ/H compatible driver, please use the general-purpose type.

Note

- Up to three cables can be used to connect the motor and the driver.
- The maximum extension distance between the motor and driver is 20 m.
- The motor cable and electromagnetic brake cable from the motor cannot be connected directly to the driver. When connecting to a driver, use a connection cable.

Example of Cable System Configuration (For DC input)

Built-in Controller Type Driver, Pulse Input Type Driver with RS-485 Communication

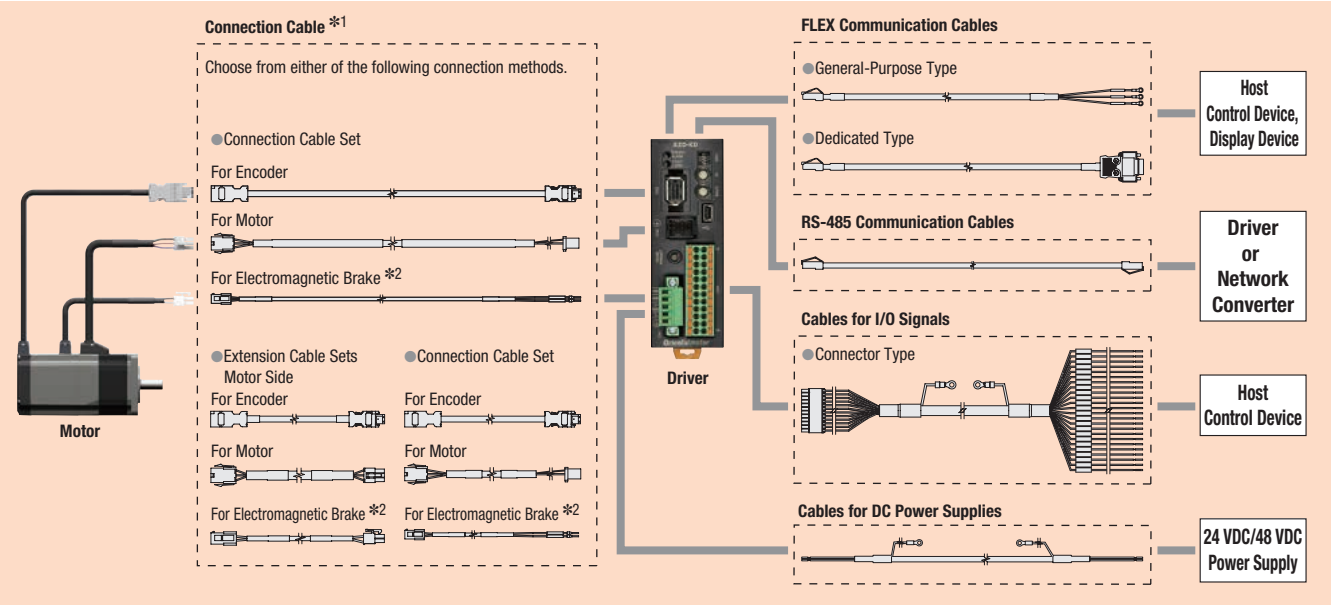

*1 Flexible connection cable sets and flexible extension cable sets with excellent durability are also available.
*2 Required for motors with an electromagnetic brake.

Note

- Up to three cables can be used to connect the motor and the driver.
- The maximum extension distance between the motor and driver is 20 m.
- The motor cable and electromagnetic brake cable from the motor cannot be connected directly to the driver. When connecting to a driver, use a connection cable.

Pulse Input Type Driver

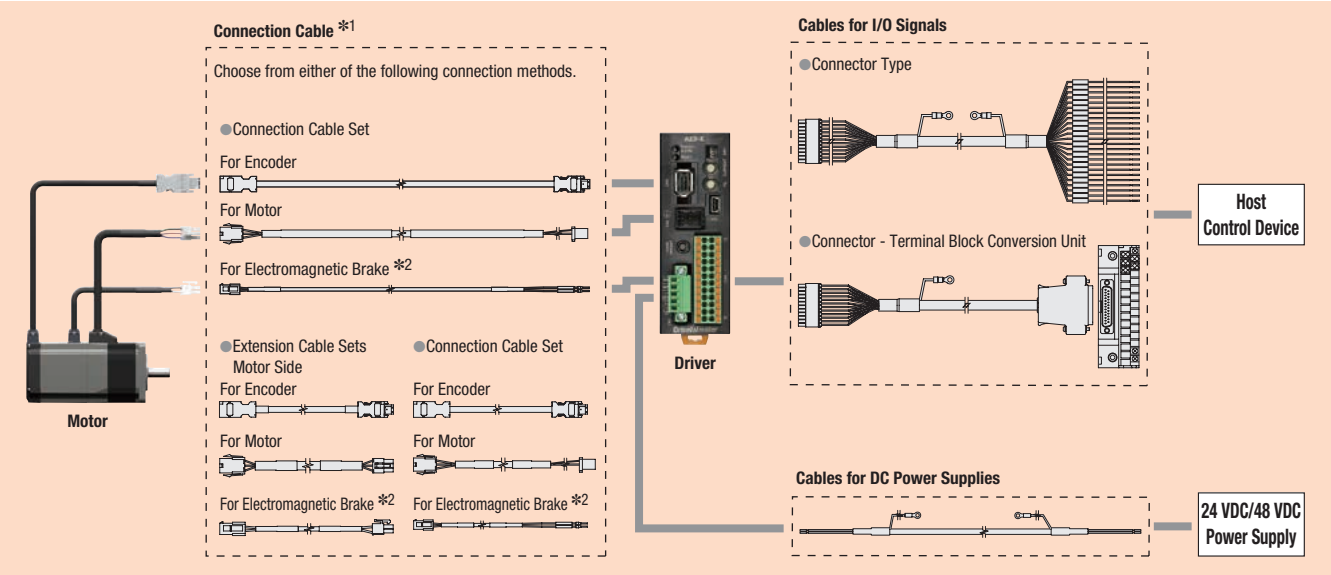

*1 Flexible connection cable sets and flexible extension cable sets with excellent durability are also available.
*2 Required for motors with an electromagnetic brake.

Note

- Up to three cables can be used to connect the motor and the driver.
- The maximum extension distance between the motor and driver is 20 m.
- The motor cable and electromagnetic brake cable from the motor cannot be connected directly to the driver. When connecting to a driver, use a connection cable.

Network Compatible Driver

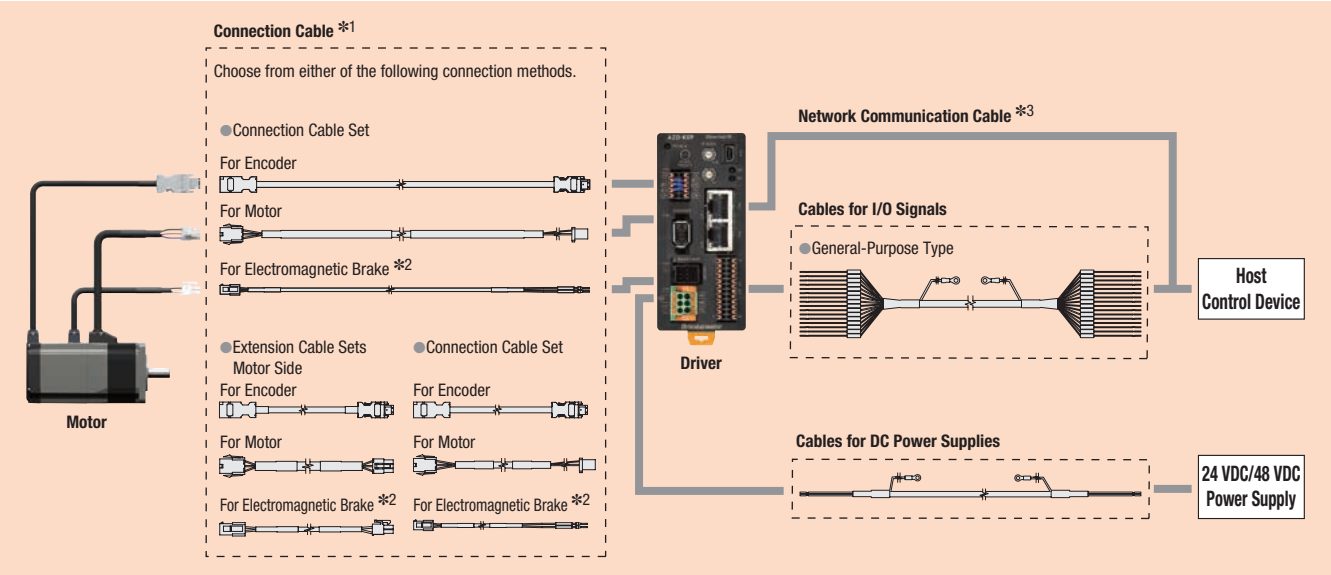

✻1 Flexible connection cable sets and flexible extension cable sets with excellent durability are also available.
✻2 Required for motors with an electromagnetic brake.
✻3 Not supplied.

Note

- Up to three cables can be used to connect the motor and the driver.
- The maximum extension distance between the motor and driver is 20 m.
- The motor cable and electromagnetic brake cable from the motor cannot be connected directly to the driver. When connecting to a driver, use a connection cable.

Connection Cables (For AC Input)

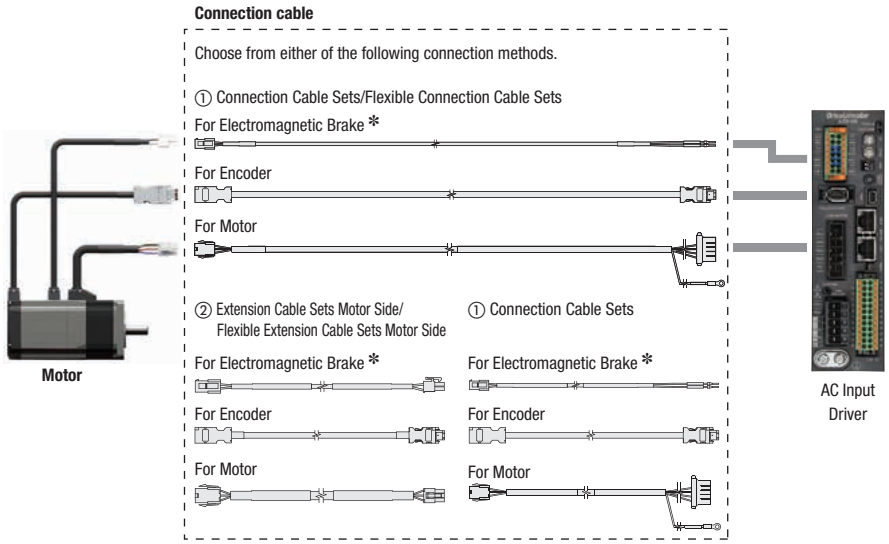

✻Required for motors with an electromagnetic brake.

Note

- Up to three cables can be used to connect the motor and the driver.
- The maximum extension distance between the motor and driver is 20 m.

① Connection Cable Sets/Flexible Connection Cable Sets

This is a connection cable set used to connect the motor and the driver. Use the flexible connection cable set in applications where the cable is bent and flexed repeatedly.
The motor cable and electromagnetic brake cable from the motor cannot be connected directly to the driver.
When connecting to a driver, use a connection cable.

●Product Line

◇Connection Cable Set

・For Motor/Encoder

●For Motor/Encoder

Length L (m)	Product Name
0.5	**CC005VZF**
1	**CC010VZF**
1.5	**CC015VZF**
2	**CC020VZF**
2.5	**CC025VZF**
3	**CC030VZF**
4	**CC040VZF**
5	**CC050VZF**
7	**CC070VZF**
10	**CC100VZF**
15	**CC150VZF**
20	**CC200VZF**

・For Motor/Encoder/Electromagnetic Brake

●For Motor/Encoder/
Electromagnetic Brake

Length L (m)	Product Name
0.5	**CC005VZFB**
1	**CC010VZFB**
1.5	**CC015VZFB**
2	**CC020VZFB**
2.5	**CC025VZFB**
3	**CC030VZFB**
4	**CC040VZFB**
5	**CC050VZFB**
7	**CC070VZFB**
10	**CC100VZFB**
15	**CC150VZFB**
20	**CC200VZFB**

◇Flexible Connection Cable Sets

・For Motor/Encoder

●For Motor/Encoder

Length L (m)	Product Name
0.5	**CC005VZR**
1	**CC010VZR**
1.5	**CC015VZR**
2	**CC020VZR**
2.5	**CC025VZR**
3	**CC030VZR**
4	**CC040VZR**
5	**CC050VZR**
7	**CC070VZR**
10	**CC100VZR**
15	**CC150VZR**
20	**CC200VZR**

● Note on use of flexible cables ➜ Page 143

・For Motor/Encoder/Electromagnetic Brake

●For Motor/Encoder/
Electromagnetic Brake

Length L (m)	Product Name
0.5	**CC005VZRB**
1	**CC010VZRB**
1.5	**CC015VZRB**
2	**CC020VZRB**
2.5	**CC025VZRB**
3	**CC030VZRB**
4	**CC040VZRB**
5	**CC050VZRB**
7	**CC070VZRB**
10	**CC100VZRB**
15	**CC150VZRB**
20	**CC200VZRB**

● Note on use of flexible cables ➜ Page 143

●Dimensions (Unit = mm)

◇Cable for Motor

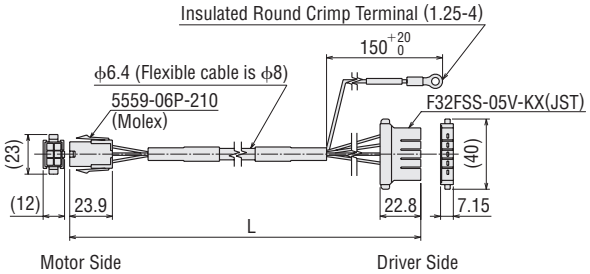

◇Cable for Electromagnetic Brake

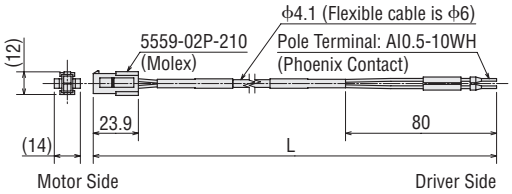

◇Encoder Cable

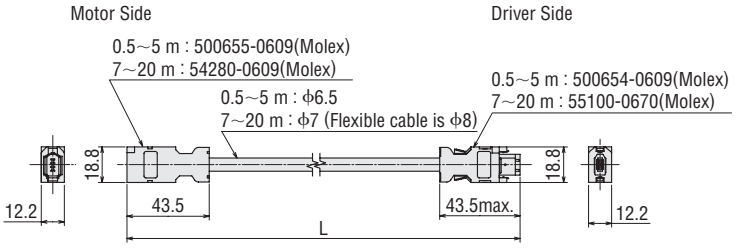

② Extension Cable Set - Motor Side/Flexible Extension Cable Set - Motor Side

This is a cable to extend the connection cable to the motor. When using an extension, the total length of the cable must be less than 20 m. Use the flexible extension cable set in applications where the cable is bent and flexed repeatedly.

●Product Line

◇Extension Cable Sets

・For Motor/Encoder

•For Motor/Encoder

Length L (m)	Product Name
1	**CC010VZFT**
2	**CC020VZFT**
3	**CC030VZFT**
5	**CC050VZFT**
7	**CC070VZFT**
10	**CC100VZFT**
15	**CC150VZFT**

・For Motor/Encoder/Electromagnetic Brake

•For Motor/Encoder/ Electromagnetic Brake

Length L (m)	Product Name
1	**CC010VZFBT**
2	**CC020VZFBT**
3	**CC030VZFBT**
5	**CC050VZFBT**
7	**CC070VZFBT**
10	**CC100VZFBT**
15	**CC150VZFBT**

◇Flexible Extension Cable Sets

・For Motor/Encoder

•For Motor/Encoder

Length L (m)	Product Name
1	**CC010VZRT**
2	**CC020VZRT**
3	**CC030VZRT**
5	**CC050VZRT**
7	**CC070VZRT**
10	**CC100VZRT**
15	**CC150VZRT**

● Note on use of flexible cables ➜ Page 143

・For Motor/Encoder/Electromagnetic Brake

•For Motor/Encoder/ Electromagnetic Brake

Length L (m)	Product Name
1	**CC010VZRBT**
2	**CC020VZRBT**
3	**CC030VZRBT**
5	**CC050VZRBT**
7	**CC070VZRBT**
10	**CC100VZRBT**
15	**CC150VZRBT**

● Note on use of flexible cables ➜ Page 143

●Dimensions (Unit = mm)

◇Cable for Motor

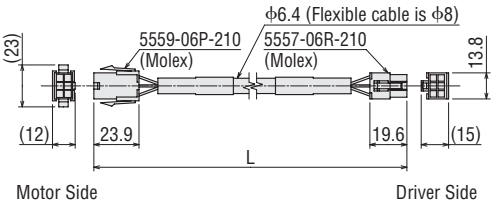

◇Cable for Electromagnetic Brake

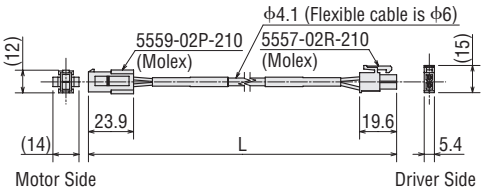

◇Encoder Cable

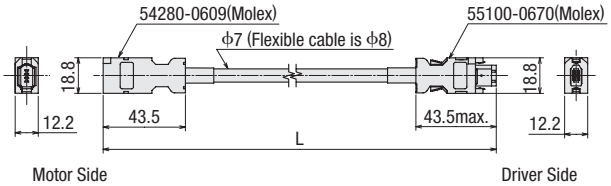

Connection Cables (For DC input)

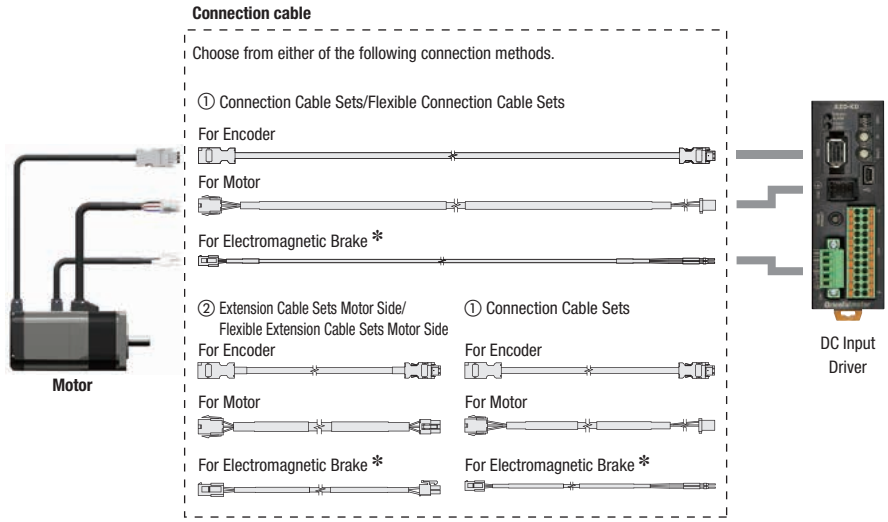

*Required for motors with an electromagnetic brake.

Note

- Up to three cables can be used to connect the motor and the driver.
- The maximum extension distance between the motor and driver is 20 m.

① Connection Cable Sets/Flexible Connection Cable Sets

This is a connection cable set used to connect the motor and the driver. Use the flexible connection cable set in applications where the cable is bent and flexed repeatedly.
The motor cable and electromagnetic brake cable from the motor cannot be connected directly to the driver.
When connecting to a driver, use a connection cable.

●Product Line

[For **AZM14**, **AZM15**, **AZM24** and **AZM26**]

◇Connection Cable Set

•For Motor/Encoder

Length L (m)	Product Name
0.5	**CC005VZ2F2**
1	**CC010VZ2F2**
1.5	**CC015VZ2F2**
2	**CC020VZ2F2**
2.5	**CC025VZ2F2**
3	**CC030VZ2F2**
4	**CC040VZ2F2**
5	**CC050VZ2F2**
7	**CC070VZ2F2**
10	**CC100VZ2F2**
15	**CC150VZ2F2**
20	**CC200VZ2F2**

◇Flexible Connection Cable Sets

•For Motor/Encoder

Length L (m)	Product Name
0.5	**CC005VZ2R2**
1	**CC010VZ2R2**
1.5	**CC015VZ2R2**
2	**CC020VZ2R2**
2.5	**CC025VZ2R2**
3	**CC030VZ2R2**
4	**CC040VZ2R2**
5	**CC050VZ2R2**
7	**CC070VZ2R2**
10	**CC100VZ2R2**
15	**CC150VZ2R2**
20	**CC200VZ2R2**

● Note on use of flexible cables → Page 143

[For **AZM46**, **AZM48**, **AZM66** and **AZM69**]

◇Connection Cable Set

・For Motor/Encoder

・For Motor/Encoder/Electromagnetic Brake

•For Motor/Encoder

Length L (m)	Product Name
0.5	**CC005VZF2**
1	**CC010VZF2**
1.5	**CC015VZF2**
2	**CC020VZF2**
2.5	**CC025VZF2**
3	**CC030VZF2**
4	**CC040VZF2**
5	**CC050VZF2**
7	**CC070VZF2**
10	**CC100VZF2**
15	**CC150VZF2**
20	**CC200VZF2**

•For Motor/Encoder/
For Electromagnetic Brake

Length L (m)	Product Name
0.5	**CC005VZFB2**
1	**CC010VZFB2**
1.5	**CC015VZFB2**
2	**CC020VZFB2**
2.5	**CC025VZFB2**
3	**CC030VZFB2**
4	**CC040VZFB2**
5	**CC050VZFB2**
7	**CC070VZFB2**
10	**CC100VZFB2**
15	**CC150VZFB2**
20	**CC200VZFB2**

◇Flexible Connection Cable Sets

・For Motor/Encoder

・For Motor/Encoder/Electromagnetic Brake

•For Motor/Encoder

Length L (m)	Product Name
0.5	**CC005VZR2**
1	**CC010VZR2**
1.5	**CC015VZR2**
2	**CC020VZR2**
2.5	**CC025VZR2**
3	**CC030VZR2**
4	**CC040VZR2**
5	**CC050VZR2**
7	**CC070VZR2**
10	**CC100VZR2**
15	**CC150VZR2**
20	**CC200VZR2**

● Note on use of flexible cables ➜ Page 143

•For Motor/Encoder/
For Electromagnetic Brake

Length L (m)	Product Name
0.5	**CC005VZRB2**
1	**CC010VZRB2**
1.5	**CC015VZRB2**
2	**CC020VZRB2**
2.5	**CC025VZRB2**
3	**CC030VZRB2**
4	**CC040VZRB2**
5	**CC050VZRB2**
7	**CC070VZRB2**
10	**CC100VZRB2**
15	**CC150VZRB2**
20	**CC200VZRB2**

● Note on use of flexible cables ➜ Page 143

●Dimensions (Unit = mm)

[For **AZM14**, **AZM15**, **AZM24** and **AZM26**]

◇Cable for Motor

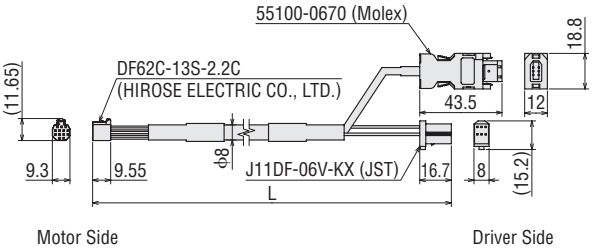

[For **AZM46**, **AZM48**, **AZM66** and **AZM69**]

◇Cable for Motor

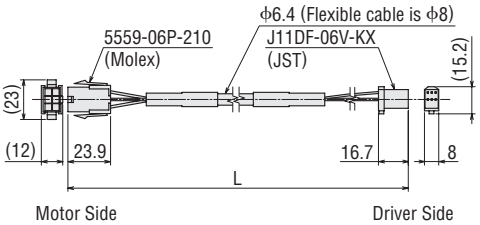

◇Cable for Electromagnetic Brake

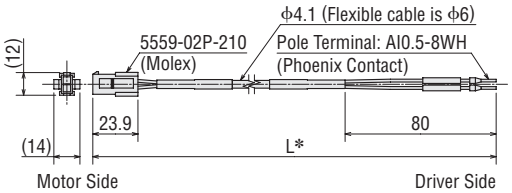

◇Encoder Cable

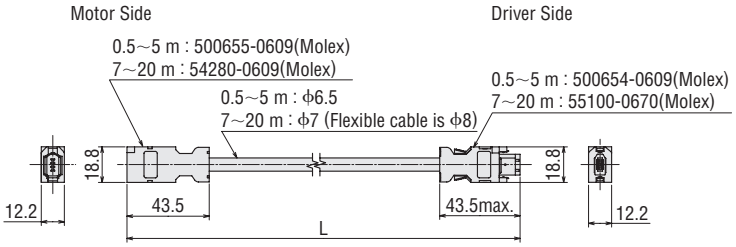

② Extension Cable Set - Motor Side/Flexible Extension Cable Set - Motor Side

This is a cable to extend the connection cable to the motor. When using an extension, the total length of the cable must be less than 20 m. Use the flexible extension cable set in applications where the cable is bent and flexed repeatedly.

●Product Line

[For **AZM14**, **AZM15**, **AZM24** and **AZM26**]

◇Extension Cable

•For Motor/Encoder

Length L (m)	Product Name
1	**CC010VZ2FT**
2	**CC020VZ2FT**
3	**CC030VZ2FT**
5	**CC050VZ2FT**
7	**CC070VZ2FT**
10	**CC100VZ2FT**
15	**CC150VZ2FT**

◇Flexible Extension Cables

•For Motor/Encoder

Length L (m)	Product Name
1	**CC010VZ2RT**
2	**CC020VZ2RT**
3	**CC030VZ2RT**
5	**CC050VZ2RT**
7	**CC070VZ2RT**
10	**CC100VZ2RT**
15	**CC150VZ2RT**

●Note on use of flexible cables ➜ Page 143

[For **AZM46**, **AZM48**, **AZM66**, **AZM69**]

◇Extension Cable Sets

・For Motor/Encoder

•For Motor/Encoder

Length L (m)	Product Name
1	**CC010VZFT**
2	**CC020VZFT**
3	**CC030VZFT**
5	**CC050VZFT**
7	**CC070VZFT**
10	**CC100VZFT**
15	**CC150VZFT**

・For Motor/Encoder/Electromagnetic Brake

•For Motor/Encoder/ Electromagnetic Brake

Length L (m)	Product Name
1	**CC010VZFBT**
2	**CC020VZFBT**
3	**CC030VZFBT**
5	**CC050VZFBT**
7	**CC070VZFBT**
10	**CC100VZFBT**
15	**CC150VZFBT**

◇Flexible Extension Cable Sets

・For Motor/Encoder

•For Motor/Encoder

Length L (m)	Product Name
1	**CC010VZRT**
2	**CC020VZRT**
3	**CC030VZRT**
5	**CC050VZRT**
7	**CC070VZRT**
10	**CC100VZRT**
15	**CC150VZRT**

●Note on use of flexible cables ➜ Page 143

・For Motor/Encoder/Electromagnetic Brake

•For Motor/Encoder/ Electromagnetic Brake

Length L (m)	Product Name
1	**CC010VZRBT**
2	**CC020VZRBT**
3	**CC030VZRBT**
5	**CC050VZRBT**
7	**CC070VZRBT**
10	**CC100VZRBT**
15	**CC150VZRBT**

●Note on use of flexible cables ➜ Page 143

●Dimensions (Unit = mm)

[For **AZM14**, **AZM15**, **AZM24** and **AZM26**]

◇Cable for Motor

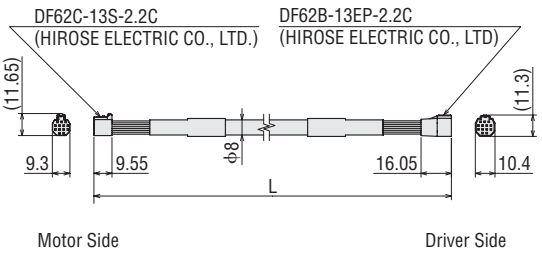

[For **AZM46**, **AZM48**, **AZM66** and **AZM69**]

◇Cable for Motor

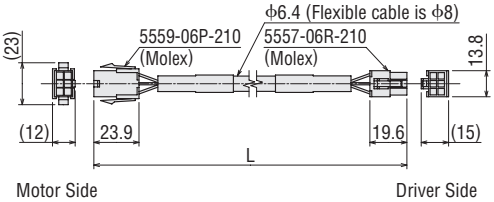

◇Cable for Electromagnetic Brake

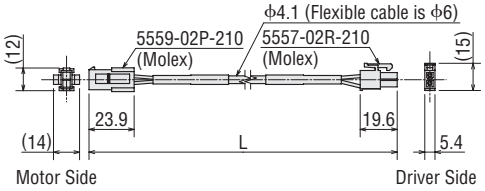

◇Encoder Cable

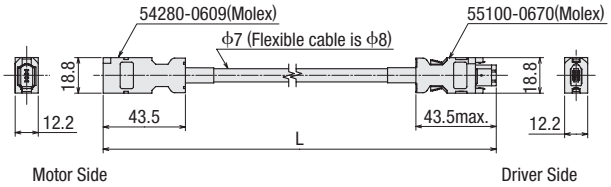

Cables for I/O Signals

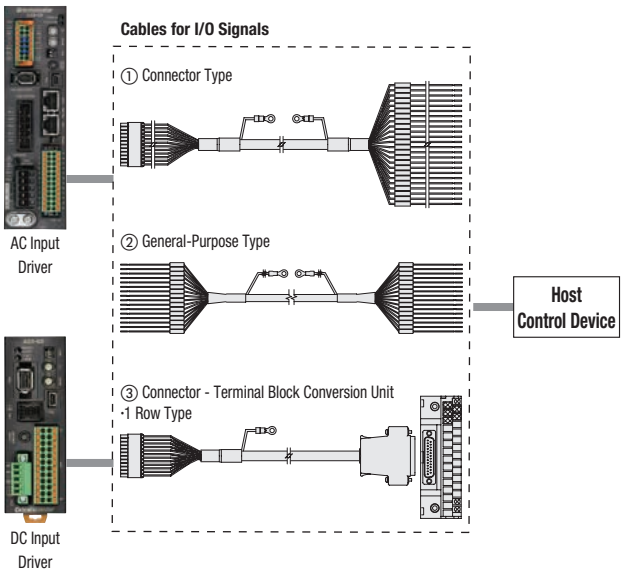

① Connector-Coupled Type

- Multi-core Shielded Cable
- Unbundled wires on one end
- Easy shielding round grounding terminals

Product Line

Product Name	Applicable Drivers	Length L (m)	Number of Lead Wire Cores	AWG
CC24D005C-1	· Built-in Controller Type · RS-485 Communication Pulse Input Type · Pulse Input Type · EtherNet/IP Compatible* · EtherCAT Drive Profile Compatible* · PROFINET Compatible*	0.5	24	24
CC24D010C-1		1		
CC24D020C-1		2		

* DC input drivers cannot be connected. Please use general-purpose I/O signal cables.

Dimensions (Unit = mm)

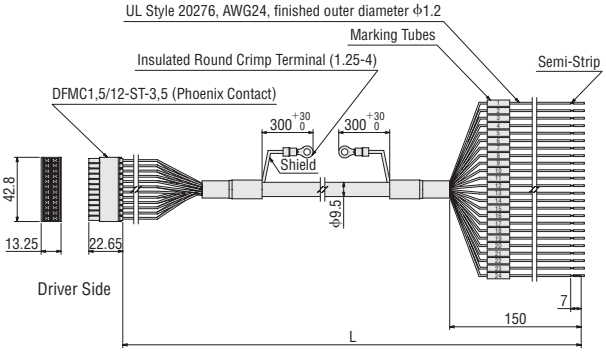

② General-Purpose Type

- Shielded Cable
- Unbundled wires on both ends
- Easy shield grounding using ground wire with a round terminal
- The number of lead wire cores can be selected to suit the functions that will be used

Product Line

Product Name	Length L (m)	Number of Lead Wire Cores	Outer diameter D (mm)	AWG
CC06D005B-1	0.5	6	ϕ5.4	24
CC06D010B-1	1			
CC06D015B-1	1.5			
CC06D020B-1	2			
CC10D005B-1	0.5	10	ϕ6.7	
CC10D010B-1	1			
CC10D015B-1	1.5			
CC10D020B-1	2			
CC12D005B-1	0.5	12	ϕ7.5	
CC12D010B-1	1			
CC12D015B-1	1.5			
CC12D020B-1	2			
CC16D005B-1	0.5	16	ϕ7.5	
CC16D010B-1	1			
CC16D015B-1	1.5			
CC16D020B-1	2			

Dimensions (Unit = mm)

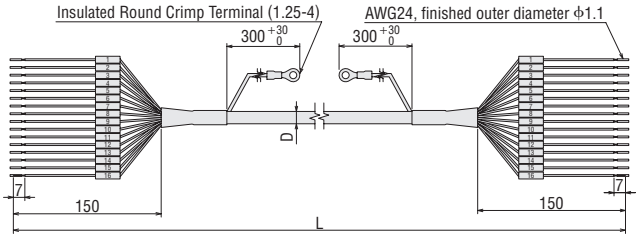

The figure depicts 16 core wires.

③ Connector – Terminal Block Conversion Unit

These are conversion units that can connect a driver to a programmable controller or a sensor using a terminal block.

- Easy shield grounding using ground wire with a round terminal
- Includes a signal name plate for easy, one-glance identification of driver signal names
- DIN rail installable

Single Row Type

Product Line

Product Line	Product Name	Applicable Drivers	Length L (m)
24 Poles	**CC24T05E**	· Built-in Controller Type · Pulse Input Type with RS-485 Communication · Pulse Input Type	0.5
	CC24T10E		1

Dimensions (Unit = mm)

Mass: 176 g

2D CAD B1368

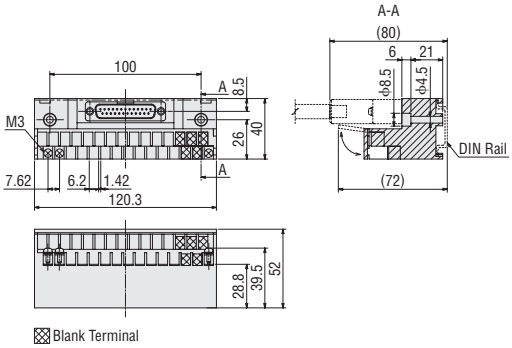

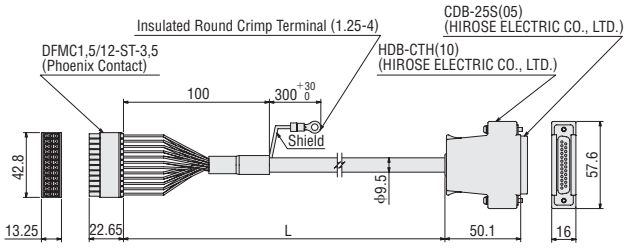

RS-485 Communication Cables

These are cables used to connect two drivers together or to connect a driver and a network converter.

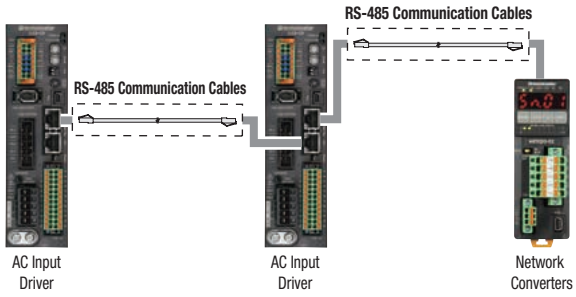

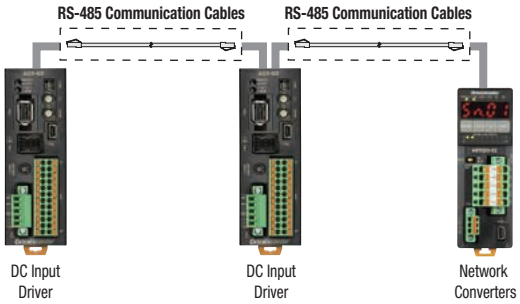

Product Line

Product Name	Length L (m)	Applicable Drivers
CC001-RS4	0.1	DC Input Driver
CC002-RS4	0.25	AC Input Driver DC Input Driver

Dimensions (Unit = mm)

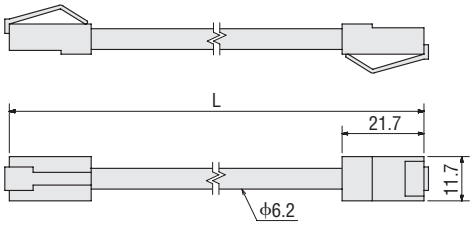

FLEX Communication Cables

This cable is convenient for connecting FLEX-compatible products to various equipment that is Modbus-controlled by RS-485.
A general-purpose cable with unbundled wires at one end and a special-purpose type that can connect directly to the programmable display (from Schneider Electric Japan or Hakko Electronic) are both available.

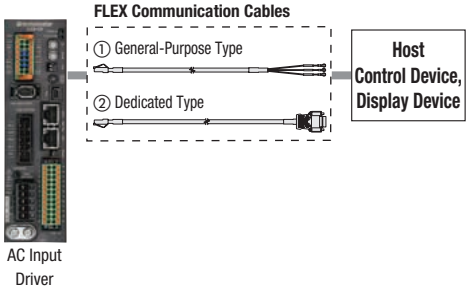

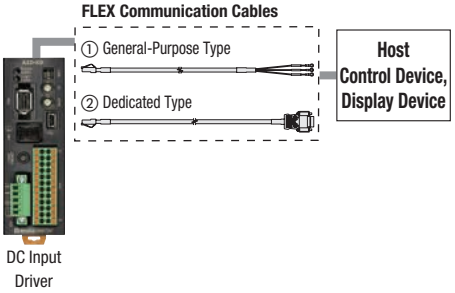

① General-Purpose Type

●Product Line

Product Line	Product Name	Length L (m)
General-Purpose Type*	**CC02FLT**	2
	CC05FLT	5

*A terminating resistor is included.

●Dimensions (Unit = mm)

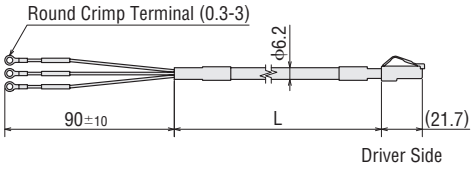

② Special-Purpose Type

●Product Line

Product Line	Product Name	Length L (m)
Special-Purpose Type Schneider Electric Japan Inc. GP3000 Series for COM1 LT3300 Series GP4000 Series For RS-485 COM1, COM2	**CC02FLT2**	2
	CC05FLT2	5
Special-Purpose Type Schneider Electric Japan Inc. GP3000 Series for COM2*1	**CC02FLT3**	2
	CC05FLT3	5
Special-Purpose Type Hakko Electronic V8 Series*2 for MJ1 and MJ2	**CC02FLT4**	2
	CC05FLT4	5
Special-Purpose Type Schneider Electric Japan For LT4000M Series	**CC02FLT5**	2
	CC05FLT5	5

●A terminating resistor is built-in.
*1 When using the product for COM2, the online adapter CA4-ADPONL-01, an accessory from Schneider Electric Japan, is required.
*2 Excluding V808iCH and V808CH

●Dimensions (Unit = mm)

CC02FLT2, CC05FLT2

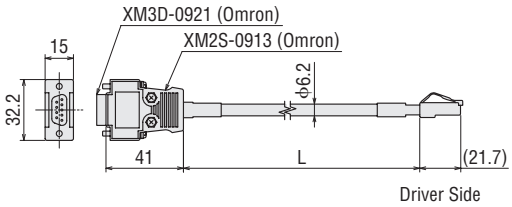

CC02FLT3, CC05FLT3

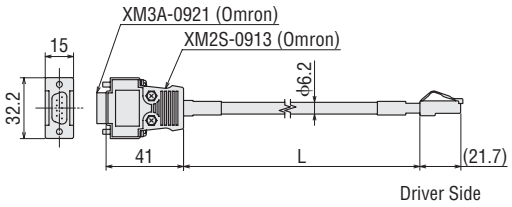

CC02FLT4, CC05FLT4

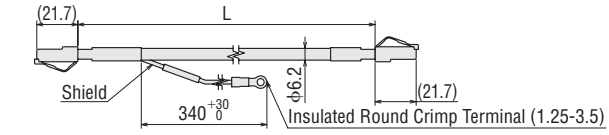

V8 Series-side Driver Side

CC02FLT5, CC05FLT5

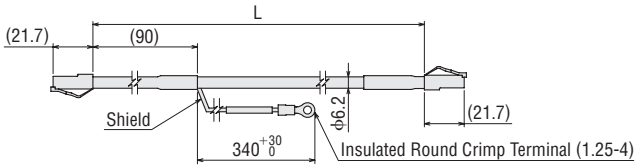

LT4000M Series-side Driver Side

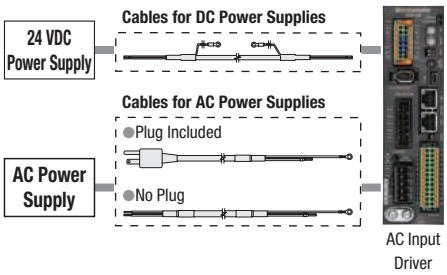

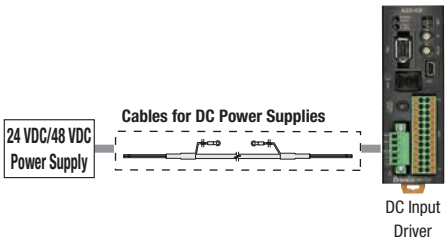

Cables for AC Power Supplies

These cables are used to connect the driver and the AC power supply. Cables are available with or without a power supply plug.

Product Line

Product Name	Product Line	Power Supply Voltage	Length L (m)
CC01AC03P	Plug Included	Single-Phase 100-120 VAC	1
CC02AC03P			2
CC03AC03P			3
CC01AC03N	No Plug	Single-Phase 100-120 VAC Single-Phase 200-240 VAC	1
CC02AC03N			2
CC03AC03N			3
CC01AC04N		Three-Phase 200-240 VAC	1
CC02AC04N			2
CC03AC04N			3

Dimensions (Unit = mm)

◇Plug Included

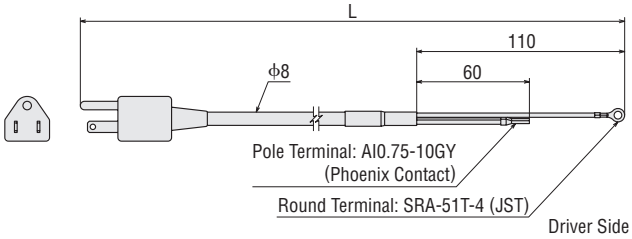

◇No Plug Single-Phase

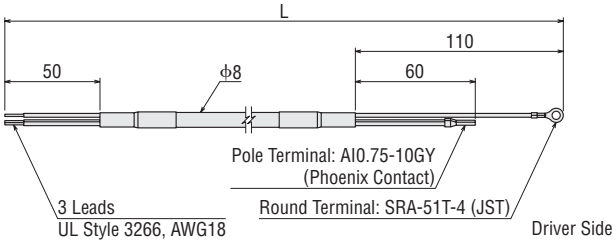

◇No Plug Three-Phase

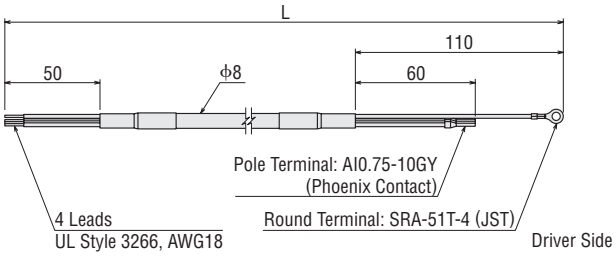

Cables for DC Power Supplies

These cables are used to connect the driver and the DC power supply.

Product Line

Product Name	Length L (m)
CC02D005-3	0.5
CC02D010-3	1
CC02D015-3	1.5
CC02D020-3	2
CC02D050-3	5

Dimensions (Unit = mm)

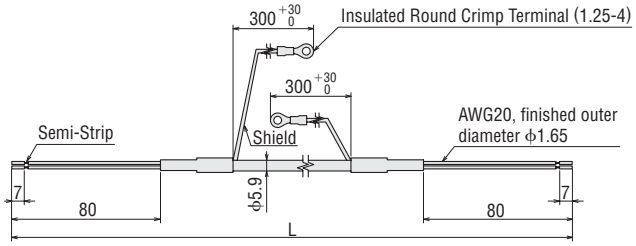

Note on Use of Cables

Note when Connecting Connectors

When inserting or removing connectors, always hold the connector.
Pulling on the cable may result in connection faults.

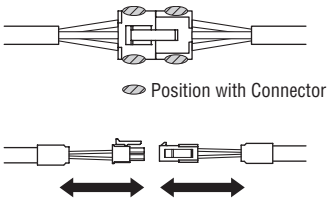

◇When Inserting the Connector

Hold the connector body and insert as straight as possible.
If the connector is angled while inserted, it may result in damage to the terminals or connection faults.

◇When Removing the Connector

Disengage the connector's lock and pull straight out.
If the connector is disengaged by pulling the cable, it may result in damage to the connector.

Notes on Routing of Flexible Cables

Do not bend the cable at the connector. This will apply stress to the connector and the terminal, and may result in connection faults or disconnections.

◇Cable Fixing Method

Please fix in 2 locations to prevent movement of the connector.

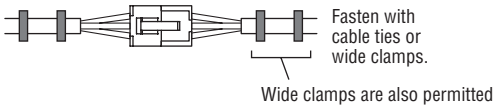

◇Cable Routing Length and Bend Radius

When routing cables, use an appropriate length that prevents pulling when the cable is moved.
The bend radius must be at least 6 times the cable diameter

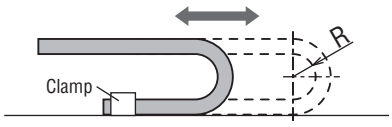

◇Cable Interference

When routing cables inside a cable holder, ensure that the cables do not interfere with each other. This will apply stress to the connector and the terminal, and may result in premature disconnection. Please carefully check the cautions when using cable holders.

◇Twisting of Cables

Route the cables so that they do not become twisted. Premature wire breaking may occur if they are bent while twisted.
After routing the wires, use the markings on the surface of the cable to ensure that the cables are not twisted.

Peripheral Equipment

For details, check the Oriental Motor website or contact the Oriental Motor sales office. **https://www.orientalmotor.co.jp/**

Flexible Couplings

Coupling Types		**XGT2**✻1
External View of Product		
Coupling Type		High-Damping Rubber
Overview		High-damping rubber is molded between aluminum alloy hubs in a one-piece construction that provides zero backlash. Excellent vibration absorption, suitable for short-time high-precision positioning operations using control system motors.
Characteristics✻2	Backlash 0	◎
	Torque	◎
	Torsional Rigidity	○
	Permissible Misalignment	○
	Vibration Absorber	◎
Fastening Method		Clamping
Materials	Body	Aluminum Alloy
	Vibration Absorbers and Shock Absorbers	Fluoroelastomer

✻1 From NBK CORPORATION
✻2 The legend for characteristics is as follows:
◎: Excellent, ○: Very good

■XGT2 Coupling (For standard type motors)

This is a single-piece construction coupling with anti-vibration rubber molded between aluminum alloy hubs.

●Product Line

Product Name
XGT2-15C-□-■
XGT2-19C-□-■
XGT2-25C-□-■
XGT2-27C-□-■
XGT2-30C-□-■

● A number indicating the inner diameter of the coupling is specified where the □ and ■ boxes are located in the product name.

Motor Mounting Brackets

Mounting brackets convenient for installing motors are available.
Pilot holes on the motor are used to allow for snug mounting. (Excluding **PFB** and **SOL**)
Motor installation screws are included. (Excluding **SOL**)

PFB

PAF

PALS

PALW03/ PALW02

PALW0/PALW2/ PALW4P-5/SOL

PLA

PLBS

PLBW

Product Line

For Standard Type

Product Name	Motor Frame Size	Applicable Product
PALS03P-2	20 mm	**AZM14, AZM15**
PALW03P-2		
PALS02P	28 mm	**AZM24, AZM26**
PALW02P		
PFB28A		
PAF0PA	42 mm	**AZM46, AZM48**
PALW0P		
PFB42A		
PALW2P-5	60 mm	**AZM66, AZM69**
PALW4P-5	85 mm	**AZM98, AZM911**

For **TS** Geared Type

Product Name	Motor Frame Size	Applicable Product
SOL0B	42 mm	**AZM46**
SOL2M4	60 mm	**AZM66**
SOL5M8	90 mm	**AZM98**

For **PS** Geared Type

Product Name	Motor Frame Size	Applicable Product
PLBS02PS	28 mm	**AZM24**
PLBW02PS		
PLBS0PS	42 mm	**AZM46**
PLBW0PS		
PLA60G	60 mm	**AZM66**
PLA60G2		
PLBS2PS		
PLBW2PS		
PLA90G	90 mm	**AZM98**
PLA90G2		
PLBS5PS		
PLBW5PS		

For **HPG** Geared Type

Product Name	Motor Frame Size	Applicable Product
PLBS0HPG	42 mm	**AZM46**
PLBW0HPG		
PLBS2HPG	60 mm	**AZM66**
PLBW2HPG		
PLBS5HPG	90 mm	**AZM98**
PLBW5HPG		

For Harmonic Geared Type

Product Name	Motor Frame Size	Applicable Product
PLBS02HG	30 mm	**AZM24**
PLBW02HG		
PLBS0HG	42 mm	**AZM46**
PLBW0HG		
PLA60H	60 mm	**AZM66**
PLA60H2		
PLBS2HG		
PLBW2HG		
PLA90H	90 mm	**AZM98**
PLBS5HG		
PLBW5HG		

Mounting Brackets for Circuit Products

MADP06

<Application Example>

MAFP02

<Application Example>

Material: SPCC
Surface Treatment: Electroless Nickel Plating

Product Name	Applicable Product	Overview & Features
MADP06	AC Input Driver*	This is the installation bracket used to mount the driver to a DIN rail.
MAFP02	DC Input Driver	This is a mounting bracket to screw attach DIN rail-mount drivers to a wall.

*Ambient temperature of 40˚C or less

Connector Cover

<Application Example>

This is a resin cover for protecting and securing the connected connector part of the cable.

- Protection level equivalent to IP20
- It can even be installed after connecting the motors and drivers.
- It is a structure to secure cables and protect lead wires.
- Can be attached to the equipment using two mounting holes (ϕ4.5)

●Product

Material: Nylon

Product Name
MAC-D*1
MAC-D02*2

*1 Encoder cable, excluding **AZM14**, **AZM15**, **AZM24** and **AZM26**
*2 For encoder cables

Regeneration Unit

During vertical drive (gravitational operation) or sudden start/stop in large inertia, an external force causes the motor to rotate and function as a power generator. When the regenerative power exceeds the driver's regenerative power absorption capacity, it may cause damage to the motor.
In such a case, the regeneration unit is connected to the driver to convert regenerative power into thermal energy for dissipation.

●Product

Product Name	Applicable Product
RGB100	AC Input Driver

●Specifications

Product Name	**RGB100**
Continuous Regenerative Power	50 W
Resistance Value	150 Ω
Thermal Protector Operating Temperature	Operation: 150±7˚C Return: 145±12˚C (Normally closed)
Thermal Protector Electrical Rating	120 VAC 4 A 30 VDC 4 A (Min. current 5 mA)

● Install the regeneration unit in a place that has the same heat radiation capability as the heat sink (material: aluminum 350×350 mm, 3 mm thick).

Network Converters

Network converters convert host communication protocol to Oriental Motor's original RS-485 communication protocol. A network converter can be used to control Oriental Motor's RS-485-compatible products within the host communication environment.

NETC01-CC NETC02-CC NETC01-M2 NETC01-M3 NETC01-ECT

Product Line

Network Type	Product Name
CC-Link Ver.1.1 Compatible	**NETC01-CC**
CC-Link Ver.2 Compatible	**NETC02-CC**
MECHATROLINK-Ⅱ Compatible	**NETC01-M2**
MECHATROLINK-Ⅲ Compatible	**NETC01-M3**
EtherCAT Compatible	**NETC01-ECT**

Orientalmotor

Oriental Motor Asia Pacific Pte. Ltd.

2 Kaki Bukit Ave 1 #05-06
Singapore 417818
TEL: +65-6745-7344 FAX: +65-6745-9405
http://www.orientalmotor.com.sg/

Oriental Motor (Thailand) Co., Ltd.

Headquarters & Bangkok Office
63 Athenee Tower, 6th Floor Unit 603, Wireless Rd,
Lumpini, Pathumwan, Bangkok 10330, Thailand
TEL: +66-2-251-1871 FAX: +66-2-251-1872
http://www.orientalmotor.co.th/

Oriental Motor (India) Pvt. Ltd.

No.810. 8th Floor, Prestige Meridian-1 No.29,
M.G.Road, Bangalore, 560001, India
TEL: +91-80-41125586 FAX: +91-80-41125588
http://www.orientalmotor.co.in/

Oriental Motor (Malaysia) Sdn. Bhd.

Headquarters & Kuala Lumpur office
A-13-1, North Point Offices, Mid Valley City,
No.1 Medan Syed Putra Utara 59200
Kuala Lumpur, Malaysia
TEL: +60-3-22875778 FAX: +60-3-22875528

Penang office
1-4-14 Krystal Point II, Lebuh Bukit Kecil 6,
Bayan Lepas 11900 Penang, Malaysia
TEL: +60-4-6423788 FAX: +60-4-6425788
http://www.orientalmotor.com.my/

For more information please contact:

©Copyright ORIENTAL MOTOR (MALAYSIA) SDN. BHD. 2023